Magnescale

SPEED × PRECISION

Magnescale Co., Ltd.

International Sales	: 3-1-4 Edagawa, Koto-ku, Tokyo 135-0051, Japan	TEL.+81(0)3-6632-7924	E-mail : info-mgs-eng@magnescale.com
Magnescale Americas Inc.	: 1 Technology Drive, Suite F217, Irvine, CA 92618, USA	TEL.+1(949)727-4017	E-mail : info-am@magnescale.com
Magnescale Europe GmbH	: Antoniusstrasse 14, 73249 Wernau, Germany	TEL.+49(0)7153-934-291	E-mail : info-eu@magnescale.com
Customer Support	: 45 Suzukawa, Isehara-shi, Kanagawa 259-1146, Japan	TEL.+81(0)463-92-2132	E-mail : info-css@magnescale.com

www.magnescale.com

The contents of this literature are as of Sep. 2022.

This catalog is printed with soy ink.
FB-EA03(01)C
C.2408.CB

Magnescale

SPEED × PRECISION

Feedback Scale General Catalog

Feedback Scale

Magnescale Co., Ltd.

Blessing of the Earth

Absolute **Magnescale**

A compass using geomagnetism will guide you across the sea even during conditions of zero visibility in dense fog or in a storm with giant waves. Similarly, Magnescale uses magnetic technology to provide precise positioning even in severely harsh environments such as oil, coolant, and condensation in machine tools. Magnescale is jam-packed with state-of-the-art technologies, from precise magnetic recording and detection technology to advanced arithmetic processing technology and beyond. And, it's these cutting-edge technologies that are supporting the next generation of global manufacturing.

Beyond to Next Stage

Advanced technology supports the evolution of high precision and resistance to harsh environments. Magnescale continues its endless evolution to develop scales with the high precision and durability demanded by machine tool applications.

Born from advanced magnetic technology,
Magnescale scales utilize a magnetic based operating
principle which makes them resistant to oil
and condensation inherent to machine tools,
thus enabling consistently stable and precise position detection.

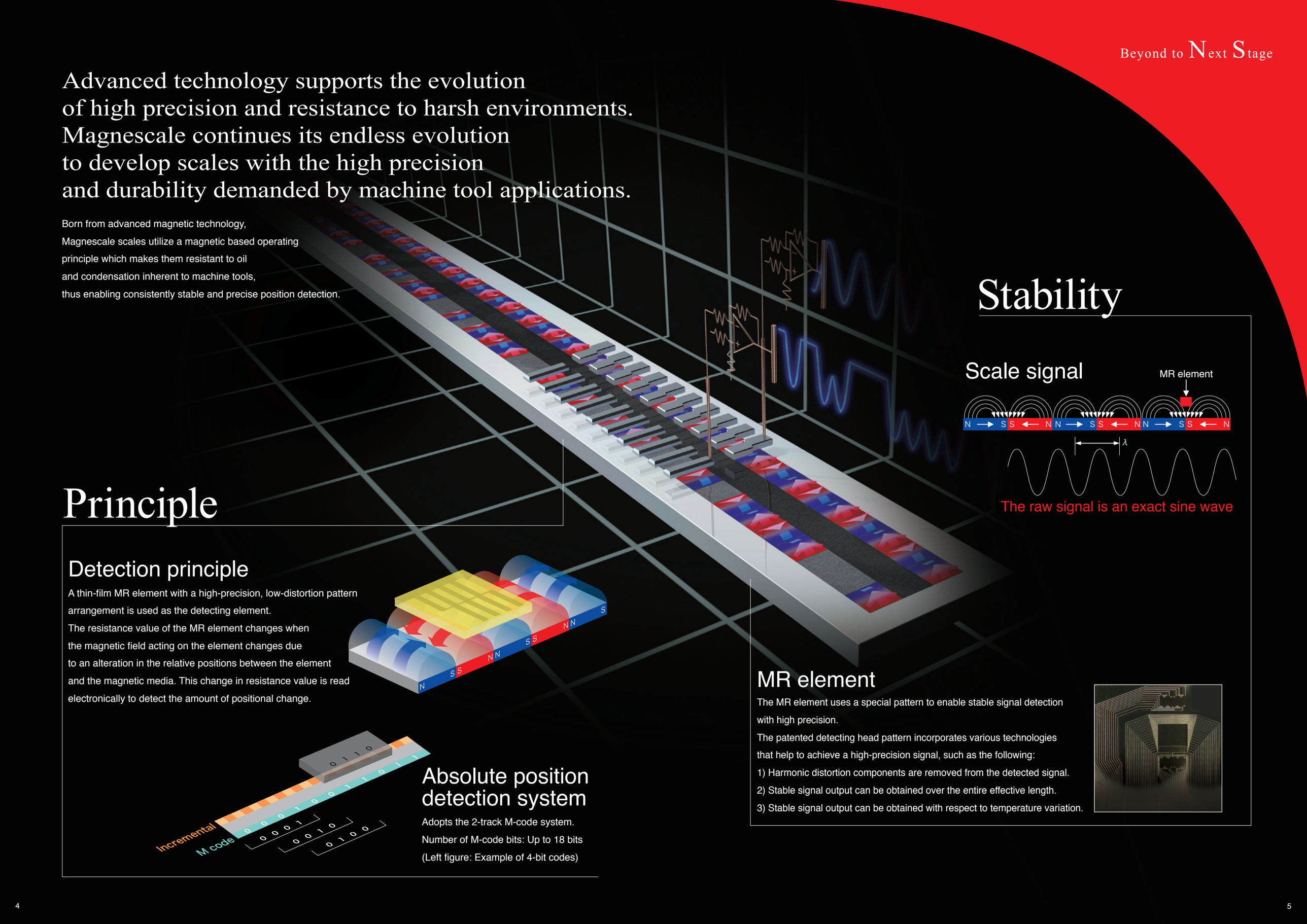

Principle

Detection principle

A thin-film MR element with a high-precision, low-distortion pattern arrangement is used as the detecting element.
The resistance value of the MR element changes when the magnetic field acting on the element changes due to an alteration in the relative positions between the element and the magnetic media. This change in resistance value is read electronically to detect the amount of positional change.

Absolute position detection system

Adopts the 2-track M-code system.
Number of M-code bits: Up to 18 bits
(Left figure: Example of 4-bit codes)

Stability

Scale signal

The raw signal is an exact sine wave

MR element

The MR element uses a special pattern to enable stable signal detection with high precision.
The patented detecting head pattern incorporates various technologies that help to achieve a high-precision signal, such as the following:
1) Harmonic distortion components are removed from the detected signal.
2) Stable signal output can be obtained over the entire effective length.
3) Stable signal output can be obtained with respect to temperature variation.

Resistance to Harsh Environments

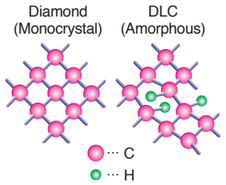

Protective structure

A diamond-like carbon (DLC) film is formed on the surface of the detecting head (the surface facing the magnetic scale) as a protective film. The detecting head is securely protected against both mechanical and environmental factors by multiple layers of protective film, which includes the DLC film (the world's first patent pending protective DLC film to be used on a MR element surface).

Impact resistance of 450 m/s², vibration resistance of 250 m/s²

Magnescale primarily uses ferrous materials to protect the detector, thereby realizing high vibration and impact resistance characteristics. Furthermore, the SR67A series employs multi-point connection construction and a highly rigid case to achieve top class vibration and impact resistance.

Thermal expansion

Magnescales' have the same linear expansion coefficient as that of cast iron used for the structure of general machine tools. Therefore, the scales exhibit the same thermal behavior as the equipment in which they are installed. This is evident in maintaining extremely stable positioning even in environments where the temperature is constantly changing. Due to the design structure of the SR series scales, they can be installed in close contact with the equipment while still achieving high positioning accuracy despite large temperature fluctuations.

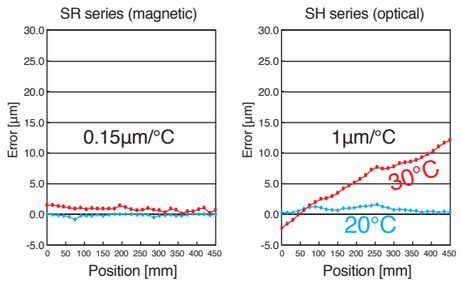

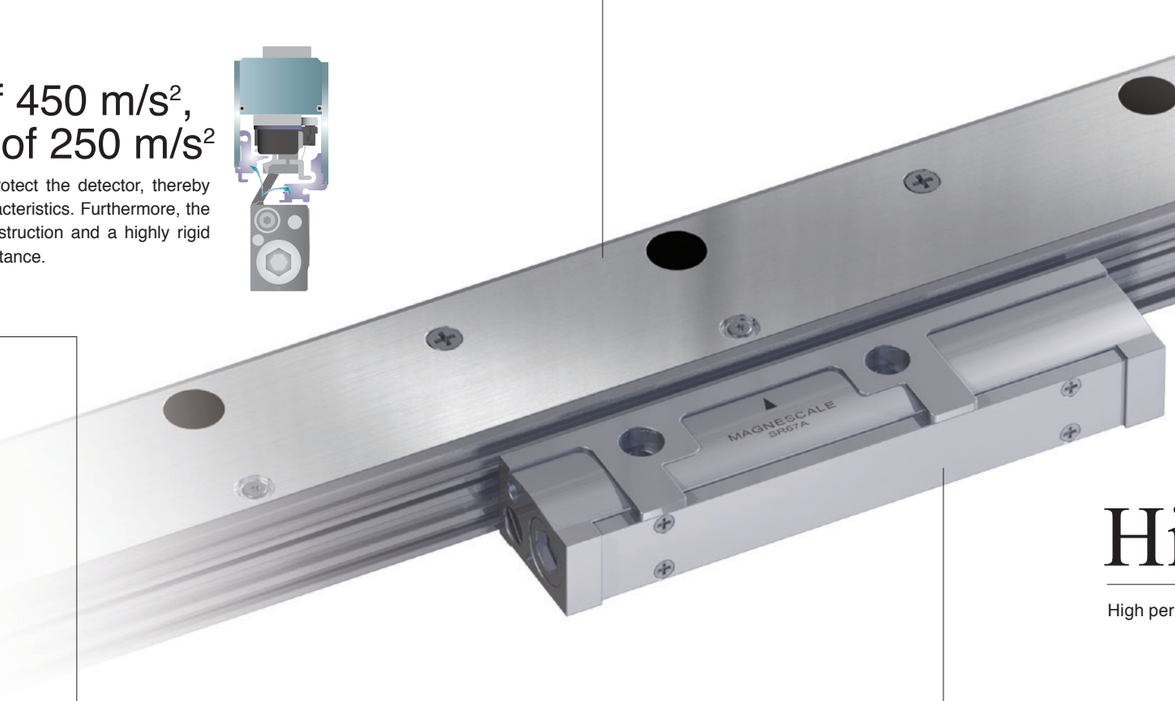

Resistance to condensation and oil

Magnescale employs a magnetic detection principle that is resistant to the effects of condensation and oil inherent to machine tools. This principle allows for the achievement of high positioning accuracy even in severe environments.

High Precision

Advanced arithmetic processing technology

Use of an arithmetic processing circuit, based on original technology, achieves a higher interpolation accuracy.

Example of multi-arithmetic processing circuit.

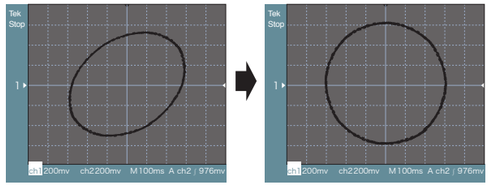

High resolution

High performance processing allows for resolutions down to 5nm and 1nm.*

Scale recording method

Optical scale

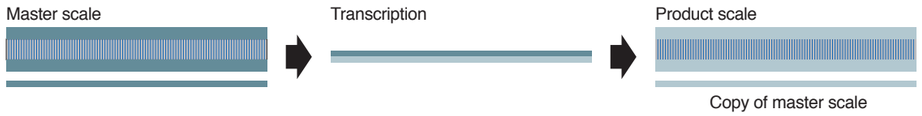

Magnescale

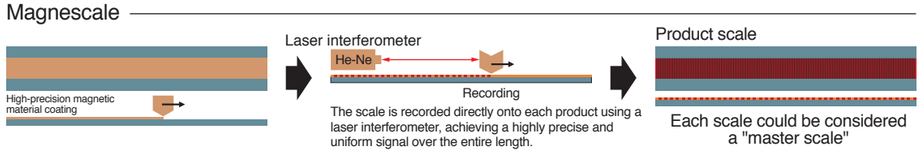

*For resolution of 1nm(0.001µm), please contact our sales department.

Lineup

	Communication system	Type/model name		Output signal	Compatible controllers	Effective length	Maximum resolution	Accuracy	Maximum response speed	Protective design grade	Page
Linear encoder	ABS (Absolute)	Slim type SR27A		Absolute serial bidirectional signal Compliant with EIA-485 / DRIVE-CLiQ	FANUC Mitsubishi Electric SIEMENS	70 to 2,040 mm	0.01µm	(3+3L/1,000) µmp-p or (5+5L/1,000) µmp-p L:Effective length(mm)	200m/min	IP54 (Air purge not included) IP65 (Air purge included)	P10・11
		Robust type SR67A	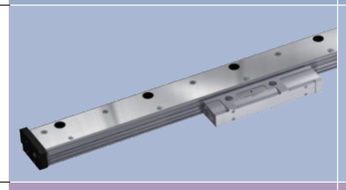	Absolute serial bidirectional signal Compliant with EIA-485 / DRIVE-CLiQ	FANUC Mitsubishi Electric SIEMENS	140 to 3,640 mm	0.01µm	(3+3L/1,000) µmp-p or (5+5L/1,000) µmp-p L:Effective length(mm)	200m/min	IP54 (Air purge not included) IP65 (Air purge included)	P12・13
	INC (Incremental)	Slim type SR74	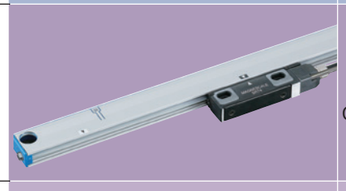	A/B/Reference point Line driver signal Compliant with EIA-422	-	70 to 2,040 mm	0.05µm	(3+3L/1,000) µmp-p or (5+5L/1,000) µmp-p L:Effective length(mm)	50m/min (Resolution: 0.1 µm, Minimum phase difference: at 50 ns)	IP54 (Air purge not included) IP65 (Air purge included)	P14・15
		Robust type SR84	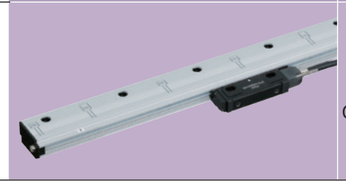	A/B/Reference point Line driver signal Compliant with EIA-422	-	140 to 3,040 mm	0.05µm	(3+3L/1,000) µmp-p or (5+5L/1,000) µmp-p L:Effective length(mm)	50m/min (Resolution: 0.1 µm, Minimum phase difference: at 50 ns)	IP54 (Air purge not included) IP65 (Air purge included)	P16・17

	Communication system	Type/model name		Output signal	Compatible controllers	Through hole diameter	Maximum resolution	Accuracy	Maximum response speed	Protective design grade	Page
Angle encoder	ABS (Absolute)	Exposed type RS97-1024E	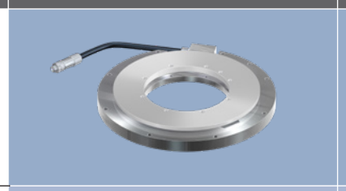	Absolute serial bidirectional signal Compliant with EIA-485 / DRIVE-CLiQ	FANUC Mitsubishi Electric SIEMENS	ϕ96mm	23 bit (8,388,608 pulse/ revolution)	±2.5"	5,000min-1	IP65	P18・19
		Exposed type RS97-1024N	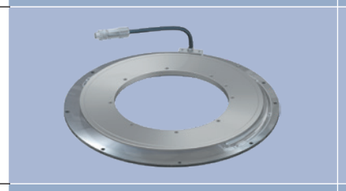	Absolute serial bidirectional signal Compliant with EIA-485 / DRIVE-CLiQ	FANUC SIEMENS	ϕ180mm	23 bit (8,388,608 pulse/ revolution)	±2.5"	5,000min-1	IP65	P20・21
		Enclosed type RU97-2048		Compliant with DRIVE-CLiQ	SIEMENS	A：ϕ20mm B：ϕ22mm	25 bit (33,554,432 pulse/ revolution)	±2.5"	2,000min-1 (Maximum mechanical revolutions: 3,000min-1)	IP65	P22・23
		Enclosed type RU77-4096	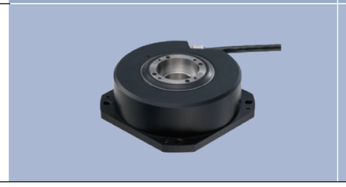	Absolute serial bidirectional signal Compliant with EIA-485	FANUC Mitsubishi Electric Yaskawa Electric	ϕ20mm	25 bit (33,554,432 pulse/ revolution)	±2.5"	2,000min-1 (Maximum mechanical revolutions: 3,000min-1)	IP65	P24・25

*Magnescale reserves the right to change product specifications without prior notice.

Absolute linear encoder

Slim type

SR27A

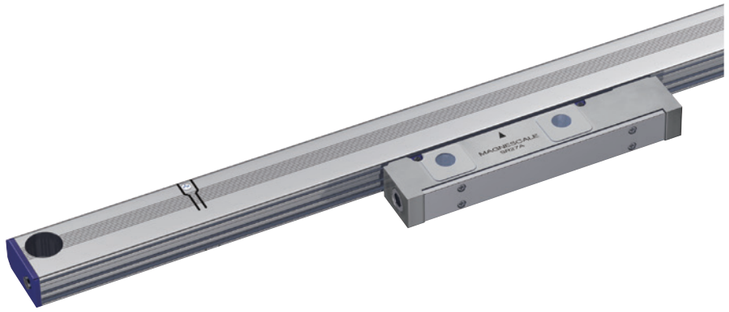

- Slim type allows installation in narrow spaces
- Magnetic system enables use even in environments with condensation, oil, and other adverse coditions
- Supports the communication protocol of each supporting manufacturer
- Same thermal expansion as iron

FANUC | Mitsubishi Electric | SIEMENS

Dimensions

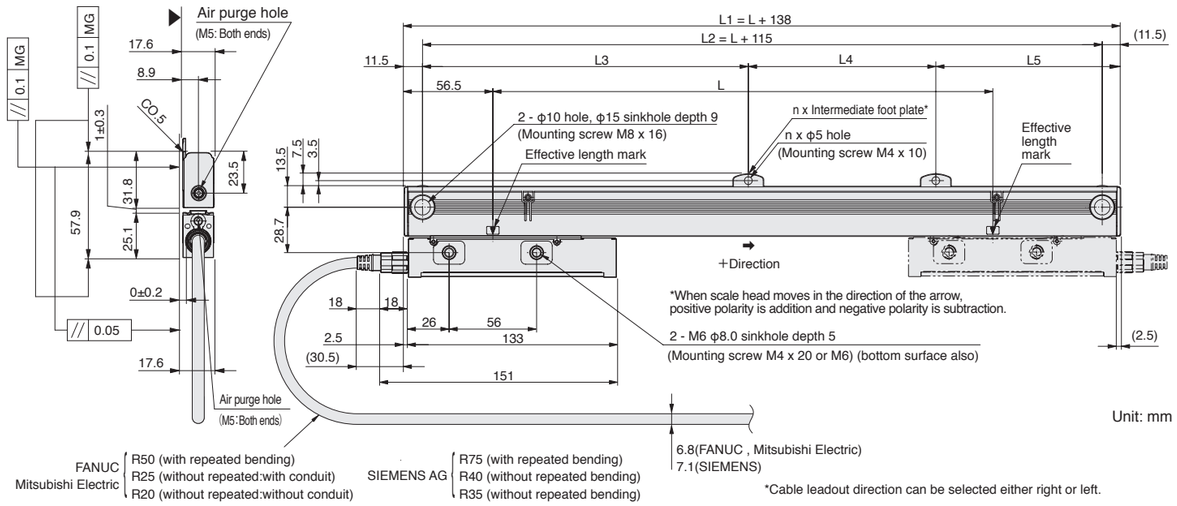

Effective length	Total length	Mounting pitch				Number of intermediate foot plates
L	L1	L2	L3	L4	L5	n
70	208	185	–	–	–	0
120	258	235	–	–	–	0
170	308	285	–	–	–	0
220	358	335	–	–	–	0
270	408	385	–	–	–	0
320	458	435	–	–	–	0
370	508	485	–	–	–	0
420	558	535	–	–	–	0
470	608	585	–	–	–	0
520	658	635	–	–	–	0
570	708	685	–	–	–	0
620	758	735	–	–	–	0
670	808	785	392.5	–	392.5	1
720	858	835	417.5	–	417.5	1

Effective length	Total length	Mounting pitch				Number of intermediate foot plates
L	L1	L2	L3	L4	L5	n
770	908	885	442.5	–	442.5	1
820	958	935	467.5	–	467.5	1
920	1,058	1,035	517.5	–	517.5	1
1,020	1,158	1,135	567.5	–	567.5	1
1,140	1,278	1,255	627.5	–	627.5	1
1,240	1,378	1,355	677.5	–	677.5	1
1,340	1,478	1,455	727.5	–	727.5	1
1,440	1,578	1,555	520	520	515	2
1,540	1,678	1,655	550	550	555	2
1,640	1,778	1,755	585	585	585	2
1,740	1,878	1,855	620	620	615	2
1,840	1,978	1,955	650	650	655	2
2,040	2,178	2,155	720	720	715	2

Unit: mm

MG: Machine guide * Intermediate foot plate: One location when L ≥ 670 mm, two locations when L ≥ 1440 mm

Notes
- The surface indicated by the ▲ marks is the installation surface.
- Screws indicated in the diagram are supplied as standard accessories.
- Movement outside the effective length (L) will damage the scale head. It is recommended that the mechanical movable length (stroke) be set to 10 mm or more to the inside of both ends of the effective length (L).

Specifications

Model name	SR27A - ×××○□AX	SR27A - ×××○□BX SR27A - ×××○□DX	SR27A - ×××○AZY
Effective length (L: mm)	70 - 2,040		
Thermal expansion coefficient	12±1 × 10^{-6} /°C		
Accuracy(at 20°C)	(3+3L/1,000) µmp-p or (5+5L/1,000) µmp-p, L: Effective length (mm)		
Reference point	Center, or user-selected position (Set at factory shipping)	Fixed to center	Fixed to 10 mm from left end of effective length
Output signal	Absolute serial bidirectional signal, compliant with EIA-485		Compliant with DRIVE-CLiQ
Compatible controllers	FANUC α/αi interface compatible	Mitsubishi Electric	SIEMENS AG
Resolution	Selectable from 0.005*, 0.01, 0.05, 0.1, 0.5 and 1 µm (Factory set)	Selectable from 0.005*, 0.01, 0.05 and 0.1 µm (Factory set)	0.01µm (Factory set)
Maximum response speed	200 m/min		
Functional safety	—		IEC 61508, EN/BS 62061 SIL 2 EN/BS/ISO 13849-1 Cat. 3 / PL d EN/BS 61800-5-2
Product Safety	FCC Part15 Subpart B Class A ICES-003 Class A Digital Device EN/BS 61000-6-2, EN/BS 61000-6-4		
Product Environment	EN/BS 63000		
Operating temperature range	0 to +50°C		
Storage temperature range	-20 to +55°C		
Vibration resistance	150 m/s² (50 Hz to 3,000 Hz)		
Impact resistance	350 m/s² (11 ms)		
Protective design grade	IP54 (Air purge not included), IP65 (Air purge included)		
Power supply voltage range	DC+4.75 to +5.25 V		DC+17 to +30.8 V
Maximum power consumption	1.3W or less (4.75V or 5.25V)		1.75W or less (17V) 1.9W or less (30.8V)
Consumption current	250mA (5V) (when the controller is connected)		75mA (24V) (when the controller is connected)
Mass	Approx. 0.39kg+ 1.53kg/m or less		
Compatible cables (types without relay connectors) Maximum cable length	CH23A-***NVF 13 m	CH23-***NVM 13 m	CH22-***NSMY 30 m
Compatible cables (types with relay connectors) Maximum cable length	CH23A-***NVK + CH23A-***NPFA 30 m	CH23-***NVK + CH23-***NPMA 30 m	CH22-***NSMF + CH22-*** NSFY 30 m

*For resolution of 0.005µm, please contact our sales department. *Magnescale reserves the right to change product specifications without prior notice.

Details of model designation

Scale

SR27A - ××× ○ □ △ #

[×××]Effective length (cm)

[○]Accuracy grade

Type	Accuracy grade
A	(5+5L/1,000)µmp-p
S	(3+3L/1,000)µmp-p

L: Effective length(mm)

[□]Resolution and direction (µm)

Type	Direction	Resolution	Type	Direction	Resolution
S	+	0.005	T	–	0.005
A		0.01	F		0.01
B		0.05	G		0.05
C		0.1	H		0.1
D		0.5	J		0.5
E		1	K		1

SIEMENS AG: S, A
Mitsubishi Electric: S, A, B, C
FANUC: S, A, B, C, D, E, T, F, G, H, J, K

[△]Communication protocol

Type	NC manufacturer	Remarks
A	FANUC	α/αi interface
B	Mitsubishi Electric	2-wire
D	Mitsubishi Electric	4-wire
Z	SIEMENS AG	DRIVE-CLiQ

[#]Reference point position

Type	Reference point position
X	Center
Y	Fixed to 10mm from left end of effective length

SIEMENS AG: Y only
Mitsubishi Electric: X only
* Please consult our representative separately for arbitrary positions.

Cables

CH22 - □□□○▽※#

[□□□]Cable length
Written by flush right, indication in "m" units, up to 30 m, 0.5 m pitch
(Example)

Type	Cable length
015	1.5m
070	7m
260	26m

[○]Conduit specification

Type	Conduit specification
C	With conduit
N	Without conduit (standard)

【▽】Cable seath (covering)

Type	Cable specification
S	PU (Polyurethane, Siemens Motion connect 800+)

【※】Scale side connector

Type	Specification	Remarks
M	Scale head connector	Standard
F	M12 connector (Female) made by Phoenix Contact	Relay/ Waterproofing
E	M12 connector (Female) with panel mount relay made by Phoenix Contact	Relay/ Waterproofing/ Attatched connector

【#】Controller side connector

Type	Specification	Remarks
None	Open-end	
Y	RJ45 connector made by YAMAICHI ELECTRONICS	Adopts NC machine tool
Z	RJ45 connector (water proof) made by YAMAICHI ELECTRONICS	Relay
F	M12 connector (Male) made by Phoenix Contact	Relay/ Waterproofing

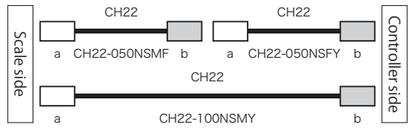

CH22-050NSMF
example)
Cable length 5m
Without conduit
PU sheath
Scale side connector
Original of Magnescale
Controller side connector
M12 (male) made by
Phoenix Contact

CH22-100NSMY
example)
Cable length 10m
Without conduit
PU sheath
Scale side connector
Original of Magnescale
Controller side connector
RJ45 by
YAMAICHI ELECTRONICS

CH22-050NSFY
example)
Cable length 5m
Without conduit
PU sheath
Scale side connector
M12 (Female)
Controller side connector
RJ45 made by
YAMAICHI ELECTRONICS

CH23 - □□□○▽※#
CH23A - □□□○▽※#
(CH23A : FANUC model only)

[□□□]
Cable length
(Example)

Type	Cable length
010	1m
005	0.5m
065	6.5m
100	10m

[○]Conduit specification

Type	Conduit specification
C	With conduit(standard)
N	Without conduit

【※】Controller side connector

Type		Specification	Remarks	
Without	With	Earth wire		
Z	-	Open-end	Scale side connector should be 10P JN2 (Female) made by Japan Aviation Electronics Industry or 2P made by TAJIMI ELECTRONICS	
None	-		Standard	
M	-	10P made by Sumitomo 3M		Mitsubishi NC, J3 (ABS)
F	-	20P straight case made by Honda Tsushin Kogyo		FANUC (ABS)
J	-	Horizontal drawing case made by HIROSE Electric		FANUC (ABS)
K	-	10P JN1 (Male) made by Japan Aviation Electronics Industry		Relay
N	-	12P R04 (Male) made by TAJIMI ELECTRONICS		Relay (fixed)

【▽】Cable sheath

Type	Cable specification
V	PVC(Φ6.8)[Scale side]
C	PU(Φ6.8)[Scale side]
P	PVC(Φ8)[Controller side]
E	PU(Φ8)[Controller side]

【#】Scale side connector

Type	Specification	Remarks
None	Original of Magnescale	Standard
A	10P JN2 (Female) made by Japan Aviation Electronics Industry	Relay
C	12P R04-9125JF8.5 made by TAJIMI ELECTRONICS	Relay (fixed)

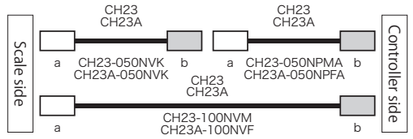

CH23-050NVK
CH23A-050NVK
example)
Cable length 5m
Without conduit
PVC sheath
Scale side connector
Original of Magnescale
Controller side connector
10P JN1 (male) made by Japan
Aviation Electronics Industry

CH23-100NVM
CH23A-100NVF
example)
Cable length 10m
Without conduit
PVC sheath
Scale side connector
Original of Magnescale
Controller side connector
<CH23> 10P made
by Sumitomo 3M
<CH23A> 20P made
by Honda Tsushin Kogyo

CH23-050NPMA
CH23A-050NPFA
example)
Cable length 5m
Without conduit
PVC sheath
Scale side connector
10P JN2 (Female) made by
Japan Aviation Electronics Industry
Controller side connector
<CH23> 10P made by Sumitomo 3M
<CH23A> 20P made
by Honda Tsushin Kogyo

Absolute linear encoder

Robust type

SR67A

- High rigidity provides resistance to shock and vibration
- Magnetic system allows use even in environments with condensation, oil, and other adverse conditions
- Enables direct communication using the protocol of each supporting manufacturer without the requirement of an amplifier
- Same thermal expansion as iron

FANUC | Mitsubishi Electric | SIEMENS

Dimensions

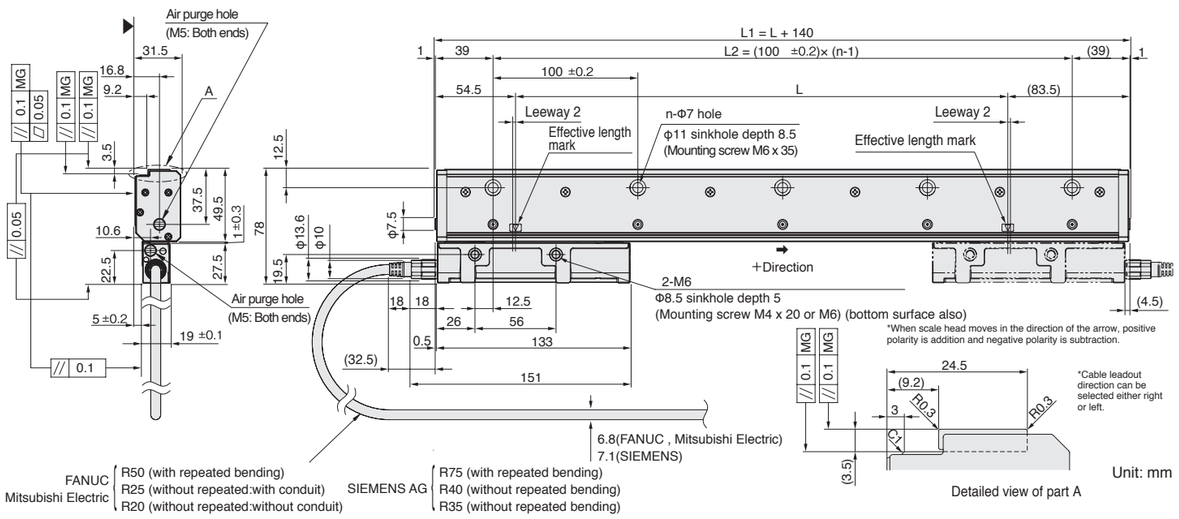

FANUC / Mitsubishi Electric: R50 (with repeated bending), R25 (without repeated:with conduit), R20 (without repeated:without conduit)

SIEMENS AG: R75 (with repeated bending), R40 (without repeated bending), R35 (without repeated bending)

Effective length L	Total length L1	L2	n
140	280	200	3
240	380	300	4
340	480	400	5
440	580	500	6
540	680	600	7
640	780	700	8
740	880	800	9
840	980	900	10
940	1,080	1,000	11
1,040	1,180	1,100	12
1,140	1,280	1,200	13
1,240	1,380	1,300	14
1,340	1,480	1,400	15
1,440	1,580	1,500	16

Effective length L	Total length L1	L2	n
1,540	1,680	1,600	17
1,640	1,780	1,700	18
1,740	1,880	1,800	19
1,840	1,980	1,900	20
2,040	2,180	2,100	22
2,240	2,380	2,300	24
2,440	2,580	2,500	26
2,640	2,780	2,700	28
2,840	2,980	2,900	30
3,040	3,180	3,100	32
3,240	3,380	3,300	34
3,440	3,580	3,500	36
3,640	3,780	3,700	38

Unit: mm

MG: Machine guide

Notes
- The surface indicated by the ▲ marks is the installation surface.
- Movement outside the effective length (L) will damage the scale head. It is recommended that the mechanical movable length (stroke) be set to 10 mm or more to the inside of both ends of the effective length (L).

Specifications

Model name	SR67A - ×××○□AX	SR67A - ×××○□BX SR67A - ×××○□DX	SR67A - ×××○AZY
Effective length (L: mm)	140 - 3,640		
Thermal expansion coefficient	12±1 × 10^{-6} /°C		
Accuracy(at 20°C)	(3+3L/1,000) μmp-p (effective length 140 to 3,040 mm) or (5+5L/1,000) μmp-p (effective length 140 to 3,640 mm), L: Effective length (mm)		
Reference point	Center, or user-selected position (Set at factory shipping)	Fixed to center	Fixed to 10 mm from left end of effective length
Output signal	Absolute serial bidirectional signal, compliant with EIA-485		Compliant with DRIVE-CLiQ
Compatible controllers	FANUC α/αi interface compatible	Mitsubishi Electric	SIEMENS AG
Resolution	Selectable from 0.005*, 0.01, 0.05, 0.1, 0.5 and 1 μm (Factory set)	Selectable from 0.005*, 0.01, 0.05 and 0.1 μm (Factory set)	0.01μm (Factory set)
Maximum response speed	200 m/min		
Functional safety	—		IEC 61508, EN/BS 62061 SIL 2 EN/BS/ISO 13849-1 Cat. 3 / PL d EN/BS 61800-5-2
Product Safety	FCC Part15 Subpart B Class A ICES-003 Class A Digital Device EN/BS 61000-6-2, EN/BS 61000-6-4		
Product Environment	EN/BS 63000		
Operating temperature range	0 to +50°C		
Storage temperature range	-20 to +55°C		
Vibration resistance	250 m/s² (50 Hz to 2,000 Hz)		
Impact resistance	450 m/s² (11 ms)		
Protective design grade	IP54 (Air purge not included), IP65 (Air purge included)		
Power supply voltage range	DC+4.75 to +5.25 V		DC+17 to +30.8 V
Maximum consumption current	1.3W or less (4.75V or 5.25V)		1.75W or less (17V) 1.9W or less (30.8V)
Consumption current	250mA (5V) (when the controller is connected)		75mA (24V) (when the controller is connected)
Mass	Approx. 0.9kg+ 5.2kg/m or less		
Compatible cables (types without relay connectors) Maximum cable length	CH23A-***NVF 13 m	CH23-***NVM 13 m	CH22-***NSMY 30 m
Compatible cables (types with relay connectors) Maximum cable length	CH23A-***NVK + CH23A-***NPFA 30 m	CH23-***NVK + CH23-***NPMA 30 m	CH22-***NSMF + CH22-*** NSFY 30 m

*For resolution of 0.005μm, please contact our sales department. *Magnescale reserves the right to change product specifications without prior notice.

Details of model designation

Scale

SR67A - ××× ○ □ △ #

[×××]Effective length (cm)

[○]Accuracy grade

Type	Accuracy grade
A	(5+5L/1,000)μmp-p
S	(3+5L/1,000)μmp-p

L: Effective length(mm)

[□]Resolution and direction (μm)

Type	Direction	Resolution	Type	Direction	Resolution
S	+	0.005	T	−	0.005
A		0.01	F		0.01
B		0.05	G		0.05
C		0.1	H		0.1
D		0.5	J		0.5
E		1	K		1

SIEMENS AG: S, A
Mitsubishi Electric: S, A, B, C
FANUC: S, A, B, C, D, E, T, F, G, H, J, K

[△]Communication protocol

Type	NC manufacture	Remarks
A	FANUC	α/αi interface
B	Mitsubishi Electric	2-wire
D	Mitsubishi Electric	4-wire
Z	SIEMENS AG	DRIVE-CLiQ

[#]Reference point position

Type	Reference point position
X	Center
Y	Fixed to 10mm from left end of effective length

SIEMENS AG: Y only
Mitsubishi Electric: X only
*Please consult our representative separately for arbitrary positions.

Cables

CH22 - □□□○▽※#

[□□□]Cable length
Written by flush right, indication in "m" units, up to 30 m, 0.5 m pitch
(Example)

Type	Cable length
015	1.5m
070	7m
260	26m

[○]Conduit specification

Type	Conduit specification
C	With conduit
N	Without conduit (standard)

【▽】Cable seath (covering)

Type	Cable specification
S	PU (Polyurethane, Siemens Motion connect 800+)

【※】Scale side connector

Type	Specification	Remarks
M	Scale head connector	Standard
F	M12 connector (Female) made by Phoenix Contact	Relay/ Waterproofing
E	M12 connector (Female) with panel mount relay made by Phoenix Contact	Relay/ Waterproofing/ Attatched connector

【#】Controller side connector

Type	Specification	Remarks
None	Open-end	
Y	RJ45 connector made by YAMAICHI ELECTRONICS	Adopts NC machine tool
Z	RJ45 connector (water proof) made by YAMAICHI ELECTRONICS	Relay
F	M12 connector (Male) made by Phoenix Contact	Relay/ Waterproofing

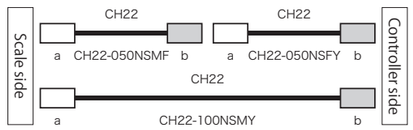

CH22-050NSMF
example)
Cable length 5m
Without conduit
PU sheath
Scale side connector
Original of Magnescale
Controller side connector
M12 (male) made by Phoenix Contact

CH22-100NSMY
example)
Cable length 10m
Without conduit
PU sheath
Scale side connector
Original of Magnescale
Controller side connector
RJ45 made by YAMAICHI ELECTRONICS

CH22-050NSFY
example)
Cable length 5m
Without conduit
PU sheath
Scale side connector
M12 (Female)
Controller side connector
RJ45 made by YAMAICHI ELECTRONICS

CH23 - □□□○▽※#
CH23A - □□□○▽※#
(CH23A : FANUC model only)

[□□□]
Cable length
(Example)

Type	Cable length
010	1m
005	0.5m
065	6.5m
100	10m

[○]Conduit specification

Type	Conduit specification
C	With conduit(standard)
N	Without conduit

[▽]Cable sheath

Type	Cable specification
V	PVC(Φ6.8)[Scale side]
C	PU(Φ6.8)[Scale side]
P	PVC(Φ8)[Controller side]
E	PU(Φ8)[Controller side]

【※】Controller side connector

Type		Specification	Remarks	
Without	With	Earth wire		
Z	-	Open-end	Scale side connector should be 10P JN2 (Female) made by Japan Aviation Electronics Industry or 2P made by TAJIMI ELECTRONICS	
None	-		Standard	
M	-	10P made by Sumitomo 3M		Mitsubishi NC, J3 (ABS)
F	-	20P straight case made by Honda Tsushin Kogyo		FANUC (ABS)
J	-	Horizontal drawing case made by HIROSE Electric		FANUC (ABS)
K	-	10P JN1 (Male) made by Japan Aviation Electronics Industry		Relay
N	-	12P R04 (Male) made by TAJIMI ELECTRONICS		Relay (fixed)

【#】Scale side connector

Type	Specification	Remarks
None	Original of Magnescale	Standard
A	10P JN2 (Female) made by Japan Aviation Electronics Industry	Relay
C	12P R04-9125JF8.5 made by TAJIMI ELECTRONICS	Relay (fixed)

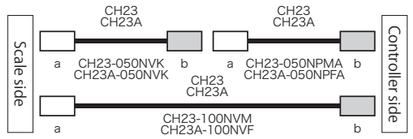

CH23-050NVK
CH23A-050NVK
example)
Cable length 5m
Without conduit
PVC sheath
Scale side connector
Original of Magnescale
Controller side connector
10P JN1 (male) made by Japan Aviation Electronics Industry

CH23-100NVM
CH23A-100NVF
example)
Cable length 10m
Without conduit
PVC sheath
Scale side connector
Original of Magnescale
Controller side connector
<CH23> 10P made by Sumitomo 3M
<CH23A> 20P made by Honda Tsushin Kogyo

CH23-050NPMA
CH23A-050NPFA
example)
Cable length 5m
Without conduit
PVC sheath
Scale side connector
10P JN2 (Female) made by Japan Aviation Electronics Industry
Controller side connector
<CH23> 10P made by Sumitomo 3M
<CH23A> 20P made by Honda Tsushin Kogyo

Incremental linear encoder

Slim type

SR74

- Slim type allows installation in narrow spaces
- Magnetic system allows use even in environments with condensation, oil, and other adverse conditions
- Same thermal expansion coefficient as iron

A/B/Reference point

Dimensions (cable left-lead out direction)

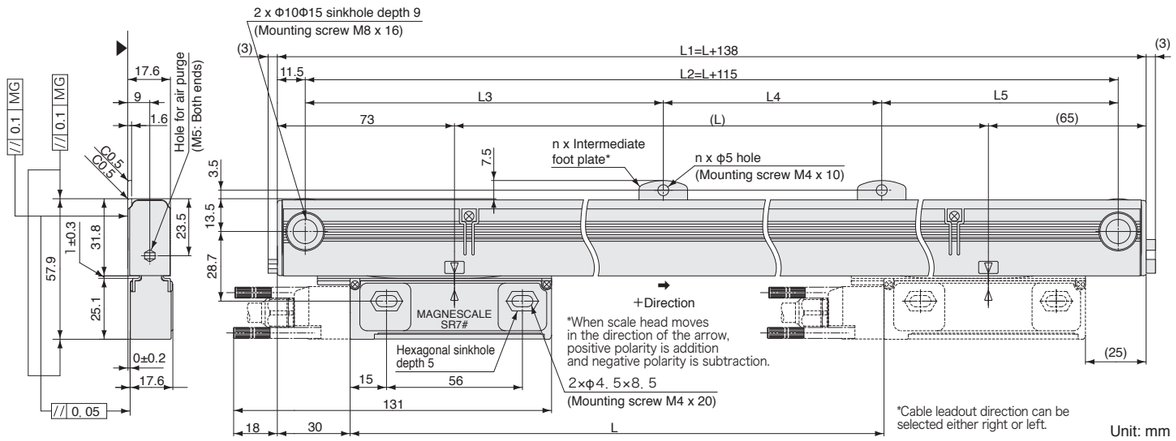

Unit: mm

Effective length	Total length	Mounting pitch				Number of intermediate foot plates
L	L1	L2	L3	L4	L5	n
70	208	185	–	–	–	0
120	258	235	–	–	–	0
170	308	285	–	–	–	0
220	358	335	–	–	–	0
270	408	385	–	–	–	0
320	458	435	–	–	–	0
370	508	485	–	–	–	0
420	558	535	–	–	–	0
470	608	585	–	–	–	0
520	658	635	–	–	–	0
570	708	685	–	–	–	0
620	758	735	–	–	–	0
720	858	835	417.5	–	417.5	1

Effective length	Total length	Mounting pitch				Number of intermediate foot plates
L	L1	L2	L3	L4	L5	n
770	908	885	442.5	–	442.5	1
820	958	935	467.5	–	467.5	1
920	1,058	1,035	517.5	–	517.5	1
1,020	1,158	1,135	567.5	–	567.5	1
1,140	1,278	1,255	627.5	–	627.5	1
1,240	1,378	1,355	677.5	–	677.5	1
1,340	1,478	1,455	727.5	–	727.5	1
1,440	1,578	1,555	520	520	515	2
1,540	1,678	1,655	550	550	555	2
1,640	1,778	1,755	585	585	585	2
1,740	1,878	1,855	620	620	615	2
1,840	1,978	1,955	650	650	655	2
2,040	2,178	2,155	720	720	715	2

MG: Machine guide * Intermediate foot plate: One location when L ≧ 720 mm, two locations when L ≧ 1440 mm

Unit: mm

Notes
- The surface indicated by the ▲ marks is the installation surface.
- Screws indicated in the diagram are supplied as standard accessories.
- Movement outside the effective length (L) will damage the scale head. It is recommended that the mechanical movable length (stroke) be set to 10 mm or more to the inside of both ends of the effective length (L).

Specifications

Model name	SR74
Effective length (L: mm)	70-2,040
Thermal expansion coefficient	12±1 × 10^{-6} /°C
Accuracy(at 20°C)	(3+3L/1,000) µmp-p or (5+5L/1,000) µmp-p L: Effective length (mm)
Reference point	Center point, Multi point (40 mm pitch), Signed-type (standard pitch 20 mm), User-selected point (1 mm pitch)
Output signal	A/B/Reference point line driver signal, compliant with EIA-422
Resolution	Selectable from 0.05, 0.1, 0.5, and 1 µm (Set at factory shipping)
Maximum response speed	50m/ min (Resolution: 0.1 µm, Minimum phase difference: at 50 ns)
Product Safety	FCC Part15 Subpart B Class A ICES-003 Class A Digital Device EN/BS 61000-6-2, EN/BS 61000-6-4
Product Environment	EN/BS 63000
Operating temperature range	0 to +50°C
Storage temperature range	-20 to +55°C
Vibration resistance	150 m/s^2 (50 Hz to 3,000Hz)
Impact resistance	350 m/s^2 (11 ms)
Protective design grade	IP54 (Air purge not included), IP65 (Air purge included)
Power supply voltage range	DC+4.75 to +5.25 V
Maximum consumption current	1.0W or less (4.75V or 5.25V)
Consumption current	200mA (5V) (when the controller is connected)
Mass	Approx. 0.27kg+ 1.36kg/m or less
Standard compatible cable	CH33-***CP/CE
Maximum cable length	15 m

*Magnescale reserves the right to change product specifications without prior notice.

Details of model designation

Scale

SR74 - ×××★○□◆###

[×××]Effective length (L): cm units

[★]Cable lead-out direction

Type	Lead-out direction
R	Right
L	Left

[○]Accuracy grade

Type	Accuracy grade
A	(5+5L/1,000) µmp-p
S	(3+3L/1,000) µmp-p

L: Effective length(mm)

[□]Resolution and direction (µm)

Type	Direction	Resolution	Type	Direction	Resolution
B	+	0.05	G	–	0.05
C		0.1	H		0.1
D		0.5	J		0.5
E		1.0	K		1

[◆]Minimum phase difference

Type	Phase difference (ns)	Type	Phase difference (ns)	Type	Phase difference (ns)
A	50	F	300	L	1,250
B	100	G	400	M	2,500
C	150	H	500	N	3,000
D	200	J	650		
E	250	K	1,000		

[###]Reference point position
(Distance from left end of effective length:Unit mm)

Reference point position	Indication method
Less than 1,000	Number (850 mm → 850)
1,000−1,099 mm	A + lower 2 digits(1,050 mm → A50)
1,100−1,199 mm	B + lower 2 digits
1,200−1,299 mm	C + lower 2 digits
1,300−1,399 mm	D + lower 2 digits
1,400−1,499 mm	E+ lower 2 digits
1,500−1,599 mm	F + lower 2 digits
1,600−1,699 mm	G+ lower 2 digits
1,700−1,799 mm	H + lower 2 digits
1,800−1,899 mm	J + lower 2 digits
1,900−1,999 mm	K + lower 2 digits
2,000−2,040 mm	L+ lower 2 digits
Center	X
Multi	Y
Signed-type	Z

Cable

CH33 - □□○▽※#

[□□]Cable length
Written by flush right,
indication in "m" units,
up to 30 m, 1 m pitch
(Example)

Type	Cable length
07	7m
26	26m

[○]Conduit

Type	Conduit
C	With conduit (standard)
N	Without conduit

【▽】Cable seath (covering)

Type	
P	PVC (Polyvinyl chloride)
E	PU (Polyurethane)

【※】Controller side connector

Type		Specification	Remarks
Without	With	Earth wire	
None	-	Open-end	Standard
A	-	D-sub 15P	
D	-	D-sub 9P	
L	-	10P made by Sumitomo 3M	Mitsubishi NC, J3 (A/B Phase)
E	P	20P straight case made by Honda Tsushin Kogyo	FANUC (A/B Phase)
H	R	Horizontal drawing case made by HIROSE Electric	FANUC (A/B Phase)

【#】Scale side connector

Type	Specification	Remarks
None	Original of Magnescale	Standard

*Relay type cannot be used for A/B Phase type of SR74 and SR84

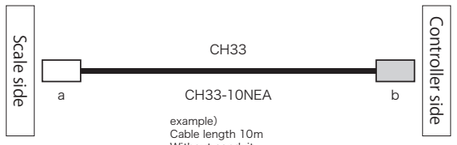

example)
Cable length 10m
Without conduit
PU sheath
Scale side connector
Original of Magnescale

Incremental linear encoder

Robust type

SR84

- High rigidity provides resistance to shock and vibration
- Magnetic system allows use even in environments with condensation, oil, and other adverse conditions
- Same thermal expansion as iron

A/B/Reference point

Dimensions (cable left-lead out direction)

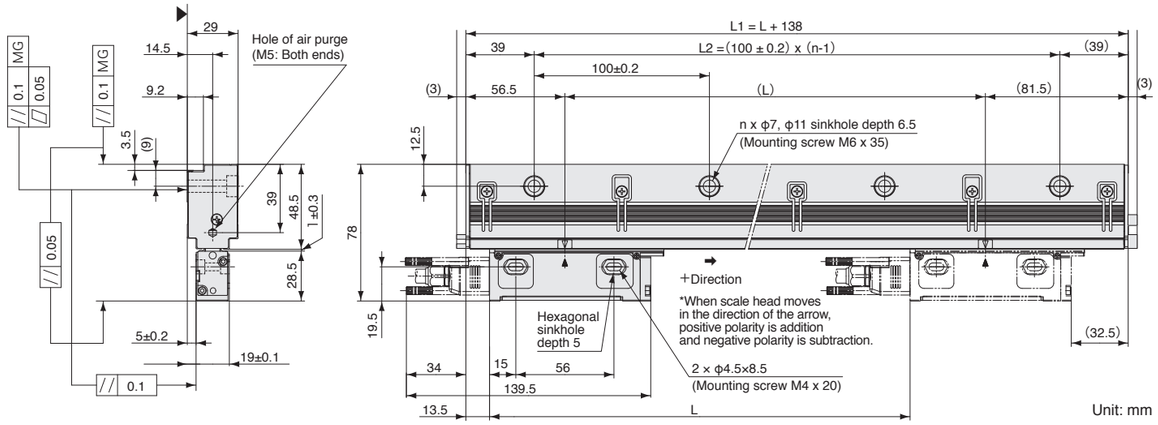

Unit: mm

*Cable leadout direction can be selected either right or left.

Effective length L	Total length L1	L2	n
140	278	200	3
240	378	300	4
340	478	400	5
440	578	500	6
540	678	600	7
640	778	700	8
740	878	800	9
840	978	900	10
940	1,078	1,000	11
1,040	1,178	1,100	12
1,140	1,278	1,200	13
1,240	1,378	1,300	14

Effective length L	Total length L1	L2	n
1,340	1,478	1,400	15
1,440	1,578	1,500	16
1,540	1,678	1,600	17
1,640	1,778	1,700	18
1,740	1,878	1,800	19
1,840	1,978	1,900	20
2,040	2,178	2,100	22
2,240	2,378	2,300	24
2,440	2,578	2,500	26
2,640	2,778	2,700	28
2,840	2,978	2,900	30
3,040	3,178	3,100	32

MG: Machine guide

Unit: mm

Notes
- The surface indicated by the ▲ marks is the installation surface.
- Screws indicated in the diagram are supplied as standard accessories.
- Movement outside the effective length (L) will damage the scale head. It is recommended that the mechanical movable length (stroke) be set to 10 mm or more to the inside of both ends of the effective length (L).

Specifications

Model name	SR84
Effective length (L: mm)	140-3,040
Thermal expansion coefficient	12±1 × 10^{-6} /°C
Accuracy(at 20°C)	(3+3L/1,000) µmp-p or (5+5L/1,000) µmp-p L: Effective length (mm)
Reference point	None, Center point, Multi point, Signed-type, User-selected point (1 mm pitch)
Output signal	A/B/Reference point line driver signal, compliant with EIA-422
Resolution	Selectable from 0.05, 0.1, 0.5, and 1 µm (Set at factory shipping)
Maximum response speed	50m/ min (Resolution: 0.1 µm, Minimum phase difference: at 50 ns)
Product Safety	FCC Part15 Subpart B Class A ICES-003 Class A Digital Device EN/BS 61000-6-2, EN/BS 61000-6-4
Product Environment	EN/BS 63000
Operating temperature range	0 to +50°C
Storage temperature range	-20 to +55°C
Vibration resistance	250 m/s² (50 Hz to 2,000Hz)
Impact resistance	450 m/s² (11 ms)
Protective design grade	IP54 (Air purge not included), IP65 (Air purge included)
Power supply voltage range	DC+4.75 to +5.25 V
Maximum consumption current	1.0W or less (4.75V or 5.25V)
Consumption current	200mA (5V) (when the controller is connected)
Mass	Approx. 1.24kg+ 4kg/m or less
Standard compatible cable	CH33-***CP/CE
Maximum cable length	15 m

*Magnescale reserves the right to change product specifications without prior notice.

Details of model designation

Scale

SR84 - ×××★○□◆###

[×××]Effective length (L): cm units

[★]Cable lead-out direction

Type	Lead-out direction
R	Right
L	Left

[○]Accuracy grade

Type	Accuracy grade
A	(5+5L/1,000) µmp-p
S	(3+3L/1,000) µmp-p

L: Effective length(mm)

[□]Resolution and direction (µm)

Type	Direction	Resolution	Type	Direction	Resolution
B	+	0.05	G	−	0.05
C		0.1	H		0.1
D		0.5	J		0.5
E		1.0	K		1

[◆]Minimum phase difference

Type	Phase difference (ns)	Type	Phase difference (ns)	Type	Phase difference (ns)
A	50	F	300	L	1,250
B	100	G	400	M	2,500
C	150	H	500	N	3,000
D	200	J	650		
E	250	K	1,000		

[###]Reference point position
(Distance from left end of effective length：Unit mm)

Reference point position	Indication method
Less than 1,000	Number (850 mm → 850)
1,000−1,099 mm	A + lower 2 digits(1,050 mm→A50)
1,100−1,199 mm	B + lower 2 digits
1,200−1,299 mm	C + lower 2 digits
1,300−1,399 mm	D + lower 2 digits
1,400−1,499 mm	E + lower 2 digits
1,500−1,599 mm	F + lower 2 digits
1,600−1,699 mm	G + lower 2 digits
1,700−1,799 mm	H + lower 2 digits
1,800−1,899 mm	J + lower 2 digits
1,900−1,999 mm	K + lower 2 digits
2,000−2,099 mm	L + lower 2 digits
2,100−2,199 mm	M + lower 2 digits
2,200−2,299 mm	N + lower 2 digits
2,300−2,399 mm	P + lower 2 digits
2,400−2,499 mm	Q + lower 2 digits
2,500−2,599 mm	R + lower 2 digits
2,600−2,699 mm	S + lower 2 digits
2,700−2,799 mm	T + lower 2 digits
2,800−2,899 mm	U + lower 2 digits
2,900−2,999 mm	V + lower 2 digits
3,000−3,040 mm	W + lower 2 digits
Center	X
Multi	Y
Signed-type	Z

Cable

CH33 - □□○▽※#

[□□]Cable length
Written by flush right,
indication in "m" units,
up to 30 m, 1 m pitch
(Example)

Type	Cable length
07	7m
26	26m

[○]Conduit

Type	Conduit
C	With conduit (standard)
N	Without conduit

【▽】Cable seath (covering)

Type	
P	PVC (Polyvinyl chloride)
E	PU (Polyurethane)

【※】Controller side connector

Type		Specification	Remarks
Without	With	Earth wire	
None	-	Open-end	Standard
A	-	D-sub 15P	
D	-	D-sub 9P	
L	-	10P made by Sumitomo 3M	Mitsubishi NC, J3 (A/B Phase)
E	P	20P straight case made by Honda Tsushin Kogyo	FANUC (A/B Phase)
H	R	Horizontal drawing case made by HIROSE Electric	FANUC (A/B Phase)

【#】Scale side connector

Type	Specification	Remarks
None	Original of Magnescale	Standard

*Relay type cannot be used for A/B Phase type of SR74 and SR84

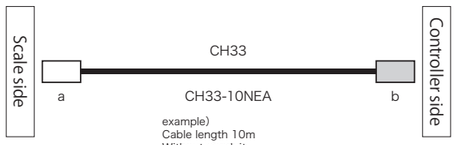

example)
Cable length 10m
Without conduit
PU sheath
Scale side connector
Original of Magnescale

Absolute angle encoder

Exposed type

RS97-1024E

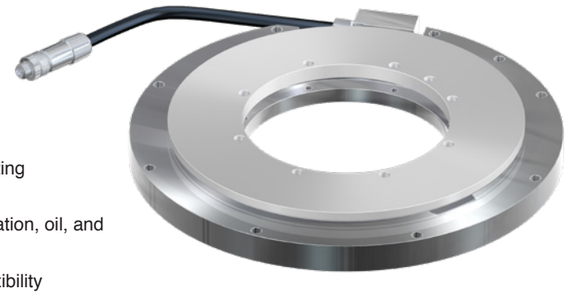

- Enables direct communication using the protocol of each supporting manufacturer without the requirement of an amplifier
- Magnetic system allows use even in environments with condensation, oil, and other adverse conditions
- 96mm diameter through-hole allows for design and mounting flexibility
- Dual head configuration reduces the effect of axial runout

FANUC | Mitsubishi Electric | SIEMENS

Dimensions

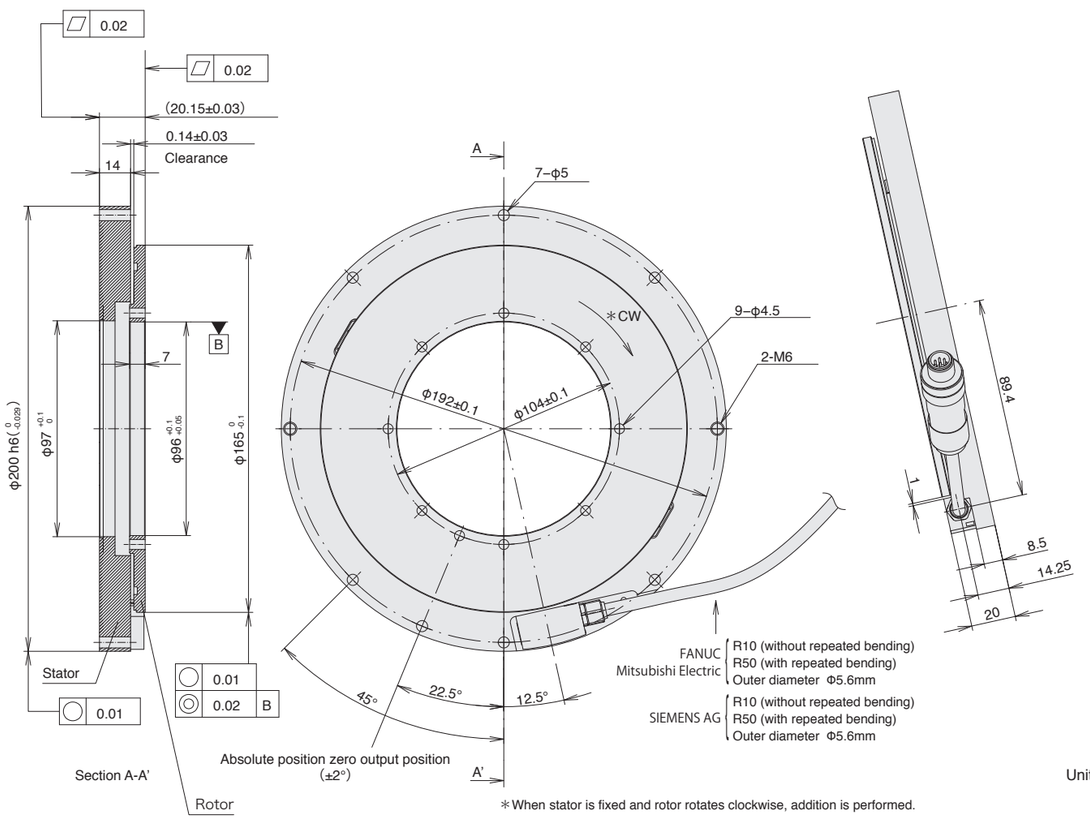

∗When stator is fixed and rotor rotates clockwise, addition is performed.

Specifications

Model name	RS97-1024EGA	RS97-1024EGD	RS97-1024EGZ
Output wave number	1,024 waves/revolution		
Through hole diameter	φ96 mm		
Accuracy(at 20°C)	±2.5"		
Output signal	Absolute serial bidirectional signal, compliant with EIA-485		Compliant with DRIVE-CLiQ
Compatible controllers	FANUC	Mitsubishi Electric	SIEMENS AG
Resolution	23 bits (8,388,608 pulses/revolution)		
Maximum response revolutions	5,000 min^{-1}		
Functional safety	—		IEC 61508, EN/BS 62061 SIL 2 EN/BS/ISO 13849-1 Cat. 3 / PL d EN/BS 61800-5-2
Product Safety	FCC Part15 Subpart B Class A ICES-003 Class A Digital Device EN/BS 61000-6-2, EN/BS 61000-6-4		
Product Environment	EN/BS 63000		
Operating temperature range	0 to +60°C		
Storage temperature range	-10 to +60°C		
Vibration resistance	150 m/s^2 (50 Hz to 2,000 Hz)		
Impact resistance	1,000 m/s^2 (11 ms)		
Protective design grade	IP65		
Power supply voltage range	DC+4.75 to +5.25 V		DC+17 to +30.8 V
Maximum consumption current	1.25W or less (4.75V) 1.2W or less (5.25V)		2.3W or less (17V) 3.1W or less (30.8V)
Consumption current	330mA (5V) (when the controller is connected)		150mA (24V) (when the controller is connected)
Output connector	JN1HS10PL4S made by Japan Aviation Elecronics Industry		SACC-M12MS-8QH made by Phoenix Contact
Moment of inertia	9×10^{-4} kgm^2 or less		
Mass	Approx. 2kg (rotor: 0.2kg/ stator: 1.7kg) or less		
Compatible cables (types without relay connectors) Maximum cable length	CH23A-***NPFA 30 m	CH23-***NPMA 30 m	CH22-***NSFY 30 m
Compatible cables (types with relay connectors) Maximum cable length	CH23A-***NPKA + CH23A-***NPFA 30 m	CH23-***NPKA + CH23-***NPMA 30 m	CH22-***NSFF + CH22-***NSFY 30 m

*Magnescale reserves the right to change product specifications without prior notice.

Details of model designation

Scale

RS97-1024EG△■■

[E]Rotor inner diameter
96 mm

[G]Resolution
23 bit

[△]Communication protocol

Type	NC manufacturer	Remarks
A	FANUC	α interface
D	Mitsubishi Electric	4-wire
Z	SIEMENS AG	DRIVE-CLiQ

[■■]Head cable length

Type	Head cable length
01	1 m
02	2 m

Cables

CH22-□□□○▽※#

[□□□]Cable length
Written by flush right, indication in "m" units, up to 30 m, 0.5 m pitch
(Example)

Type	Cable length
015	1.5m
070	7m
260	26m

[○]Conduit specification

Type	Conduit specification
C	With conduit
N	Without conduit (standard)

【▽】Cable seath (covering)

Type	Cable specification
S	PU (Polyurethane, Siemens Motion connect 800+)

【※】Scale side connector

Type	Specification	Remarks
M	Scale head connector	Standard
F	M12 connector (Female) made by Phoenix Contact	Relay/ Waterproofing
E	M12 connector (Female) made by Phoenix Contact	Relay/ Waterproofing/ Attatched connector

【#】Controller side connector

Type	Specification	Remarks
None	Open-end	
Y	RJ45 connector made by YAMAICHI ELECTRONICS	Adopts NC machine tool
Z	RJ46 connector (water proof) made by YAMAICHI ELECTRONICS	Relay
F	M12 connector (Male) made by Phoenix Contact	Relay/ Waterproofing

CH23-□□□○▽※#
CH23A-□□□○▽※#
(CH23A : FANUC model only)

[□□□]
Cable length
(Example)

Type	Cable length
010	1m
005	0.5m
065	6.5m
100	10m

[○]Conduit specification

Type	Conduit specification
C	With conduit (standard)
N	Without conduit

[▽]Cable sheath

Type	Cable specification
P	PVC(Φ8)[Controller side]
E	PU(Φ8)[Controller side]

【※】Controller side connector

Type		Specification	Remarks	
Without	With	Earth wire		
Z	-	Open-end	Scale side connector should be 10P JN2 (Female) made by Japan Aviation Electronics Industry or 2P made by TAJIMI ELECTRONICS	
None	-		Standard	
M	-	10P made by Sumitomo 3M		Mitsubishi NC, J3 (ABS)
F	-	20P straight case made by Honda Tsushin Kogyo		FANUC (ABS)
J	-	Horizontal drawing case made by HIROSE Electric		FANUC (ABS)
K	-	10P JN1 (Male) made by Japan Aviation Electronics Industry		Relay
N	-	12P R04 (Male) made by TAJIMI ELECTRONICS		Relay (fixed)

【#】Scale side connector

Type	Specification	Remarks
A	10P JN2 (Female) made by Japan Aviation Electronics Industry	Relay

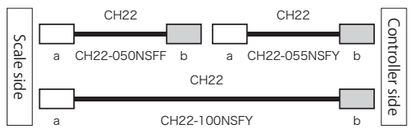

CH22-050NSFF
example)
Cable length 5m
Without conduit
PU sheath
Scale side connector
M12 (Female) made by Phoenix Contact
Controller side connector
M12 (Male) made by Phoenix Contact

CH22-100NSFY
example)
Cable length 10m
Without conduit
PU sheath
Scale side connector
M12 (Female) made by Phoenix Contact
Controller side connector
RJ45 made by YAMAICHI ELECTRONICS

CH22-055NSFY
example)
Cable length 5m
Without conduit
PU sheath
Scale side connector
M12 (Female) made by Phoenix Contact
Controller side connector
RJ45 made by YAMAICHI ELECTRONICS

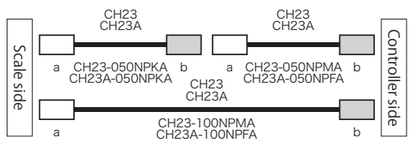

CH23-050NPKA
CH23A-050NPKA
example)
Cable length 5m
Without conduit
PVC sheath(Φ8)
Scale side connector
10P JN2 (Female) made by Japan Aviation Electronics Industry
Controller side connector
10P JN1 (Male) made by Japan Aviation Electronics Industry

CH23-100NPFA
CH23A-100NPFA
example)
Cable length 10m
Without conduit
PVC sheath(Φ8)
Scale side connector
10P JN2 (Female) made by Japan Aviation Electronics Industry
Controller side connector
<CH23> 10P made by Sumitomo 3M
<CH23A> 20P made by Honda Tsushin Kogyo

CH23-050NPMA
CH23A-050NPFA
example)
Cable length 5m
Without conduit
PVC sheath(Φ8)
Scale side connector
10P JN2 (Female) made by Japan Aviation Electronics Industry
Controller side connector
<CH23> 10P made by Sumitomo 3M
<CH23A> 20P made by Honda Tsushin Kogyo

Absolute angle encoder

Exposed type

RS97-1024N

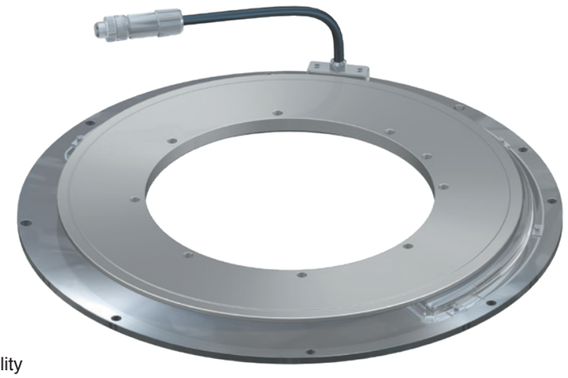

- Enables direct communication using the protocol of each supporting manufacturer without the requirement of an amplifier
- Magnetic system enables use even in environments with condensation, oil, and other adverse conditions
- 180mm diameter through-hole allows for design and mounting flexibility
- Dual head configuration reduces the effect of axial runout

FANUC SIEMENS

Dimensions

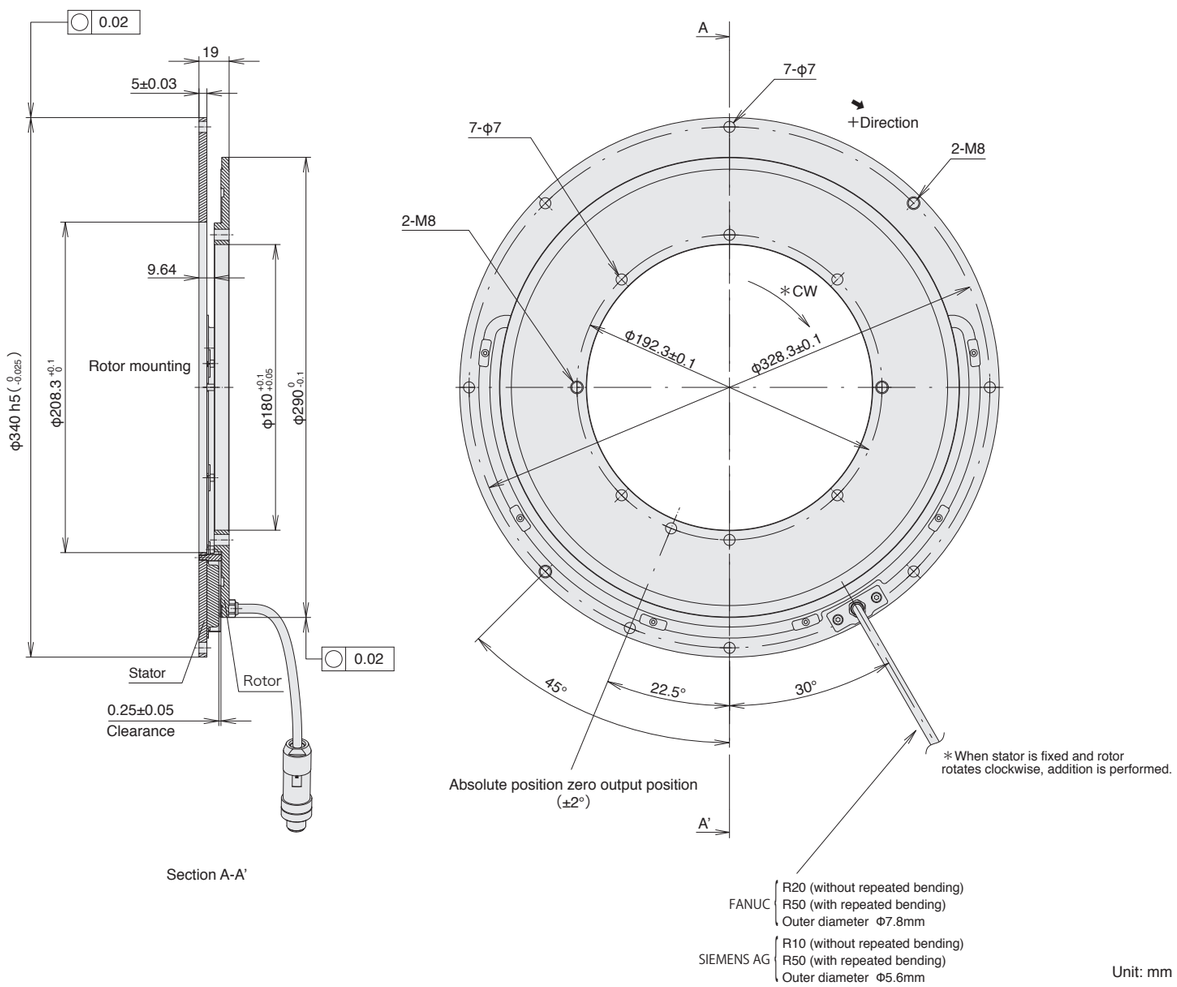

Unit: mm

Specifications

Model name	RS97-1024NGA	RS97-1024NGZ
Output wave number	1,024 waves/revolution	
Through hole diameter	φ180 mm	
Accuracy(at 20°C)	±2.5"	
Output signal	Absolute serial bidirectional signal, compliant with EIA-485	Compliant with DRIVE-CLiQ
Compatible controllers	FANUC	SIEMENS AG
Resolution	23 bits (8,388,608 pulses/revolution)	
Maximum response revolutions	5,000 min^{-1}	
Functional Safety	—	IEC 61508, EN/BS 62061 SIL 2 EN/BS/ISO 13849-1 Cat. 3 / PL d EN/BS 61800-5-2
Product Safety	FCC Part15 Subpart B Class A ICES-003 Class A Digital Device EN/BS 61000-6-2, EN/BS 61000-6-4	
Product Environment	EN/BS 63000	
Operating temperature range	0 to +60°C	
Storage temperature range	-10 to +60°C	
Vibration resistance	150 m/s^2 (50 Hz to 2,000 Hz)	
Impact resistance	1,000 m/s^2 (11 ms)	
Protective design grade	IP65	
Power supply voltage range	DC+4.75 to +5.25 V	DC+17 to +30.8 V
Maximum consumption current	1.35W or less (4.75V) 1.3W or less (5.25V)	2.5W or less (17V) 3.2W or less (30.8V)
Consumption current	300mA (5V) (when the controller is connected)	150mA (24V) (when the controller is connected)
Output connector	JN1HS10PL2 made by Japan Aviation Elecronics Industry	SACC-M12MS-8Q H made by Phoenix Contact
Moment of inertia	8.8× 10^{-3} kgm^2 or less	
Mass	Approx. 3.4kg (rotor: 0.6kg/ stator: 2.8kg) or less	
Compatible cables (types without relay connectors) Maximum cable length	CH23A-***NPFA 30 m	CH22-***NSFY 30 m
Compatible cables (types with relay connectors) Maximum cable length	CH23A-***NPKA + CH23A-***NPFA 30 m	CH22-***NSFF + CH22-***NSFY 30 m

*Magnescale reserves the right to change product specifications without prior notice.

Details of model designation

Scale

RS97-1024NG△■■

[N]Rotor inner diameter
180 mm

[G]Resolution
23 bit

[△]Communication protocol

Type	NC manufacturer	Remarks
A	FANUC	α interface
Z	SIEMENS AG	DRIVE-CLiQ

[■■]Head cable length

Type	Head cable length
01	1 m
02	2 m
03	3 m

Cables

CH22-□□□○▽※#

[□□□]Cable length
Written by flush right, indication in "m" units, up to 30 m, 0.5 m pitch
(Example)

Type	Cable length
015	1.5m
070	7m
260	26m

[○]Conduit specification

Type	Conduit specification
C	With conduit
N	Without conduit (standard)

[▽]Cable seath (covering)

Type	Cable specification
S	PU (Polyurethane, Siemens Motion connect 800+)

[※]Scale side connector

Type	Specification	Remarks
M	Scale head connector	Standard
F	M12 connector (Female) made by Phoenix Contact	Relay/ Waterproofing
E	M12 connector (Female) made by Phoenix Contact	Relay/ Waterproofing/ Attatched connector

[#]Controller side connector

Type	Specification	Remarks
None	Open-end	
Y	RJ45 connector made by YAMAICHI ELECTRONICS	Adopts NC machine tool
Z	RJ45 connector (water proof) made by YAMAICHI ELECTRONICS	Relay
F	M12 connector (Male) made by Phoenix Contact	Relay/ Waterproofing

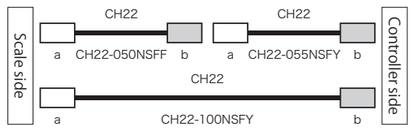

CH22-050NSFF
example)
Cable length 5m
Without conduit
PU sheath
Scale side connector
M12 (Female) made by Phoenix Contact
Controller side connector
M12 (Male) made by Phoenix Contact

CH22-100NSFY
example)
Cable length 10m
Without conduit
PU sheath
Scale side connector
M12 (Female) made by Phoenix Contact
Controller side connector
RJ45 made by YAMAICHI ELECTRONICS

CH22-055NSFY
example)
Cable length 5m
Without conduit
PU sheath
Scale side connector
M12 (Female) made by Phoenix Contact
Controller side connector
RJ45 made by YAMAICHI ELECTRONICS

CH23A-□□□○▽※#

[□□□]
Cable length
(Example)

Type	Cable length
010	1m
005	0.5m
065	6.5m
100	10m

[○]Conduit specification

Type	Conduit specification
C	With conduit (standard)
N	Without conduit

[▽]Cable sheath

Type	Cable specification
P	PVC(Φ8)[Controller side]
E	PU(Φ8)[Controller side]

[※]Controller side connector

Type		Specification	Remarks
Without	With	Earth wire	
Z	-	Open-end	Scale side connector should be 10P JN2 (Female) made by Japan Aviation Electronics Industry or 2P made by TAJIMI ELECTRONICS
None	-		Standard
F	-	20P straight case made by Honda Tsushin Kogyo	FANUC (ABS)
J	-	Horizontal drawing case made by HIROSE Electric	FANUC (ABS)
K	-	10P JN1 (Male) made by Japan Aviation Electronics Industry	Relay
N	-	12P R04 (Male) made by TAJIMI ELECTRONICS	Relay (fixed)

[#]Scale side connector

Type	Specification	Remarks
A	10P JN2 (Female) made by Japan Aviation Electronics Industry	Relay

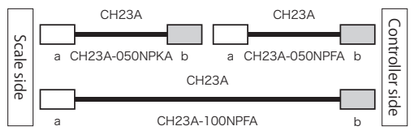

CH23A-050NPKA
example)
Cable length 5m
Without conduit
PVC sheath(Φ8)
Scale side connector
10P JN2 (Female) made by Japan Aviation Electronics Industry
Controller side connector
10P JN1 (Male) made by Japan Aviation Electronics Industry

CH23A-100NPFA
example)
Cable length 10m
Without conduit
PVC sheath(Φ8)
Scale side connector
10P JN2 (Female) made by Japan Aviation Electronics Industry
Controller side connector
20P made by Honda Tsushin Kogyo

CH23A-050NPFA
example)
Cable length 5m
Without conduit
PVC sheath(Φ8)
Scale side connector
10P JN2 (Female) made by Japan Aviation Electronics Industry
Controller side connector
20P made by Honda Tsushin Kogyo

Absolute angle encoder

Enclosed type

RU97-2048

- Enables direct communication using the SIEMENS DRIVE-CLiQ protocol without the requirement of an amplifier
- Magnetic system enables use even in environments with condensation, oil, and other adverse conditions
- Internal coupling allows for design and mounting flexibility

SIEMENS

Dimensions

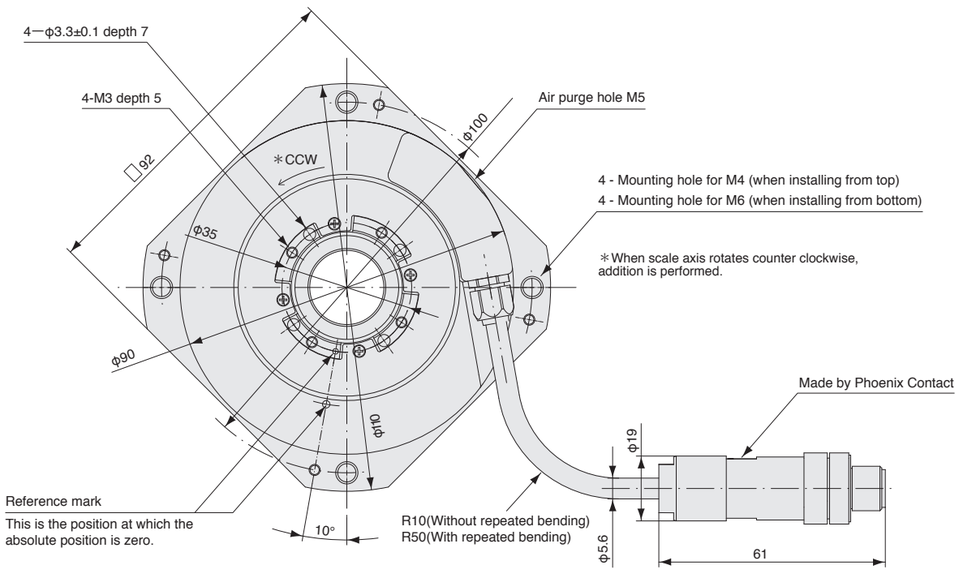

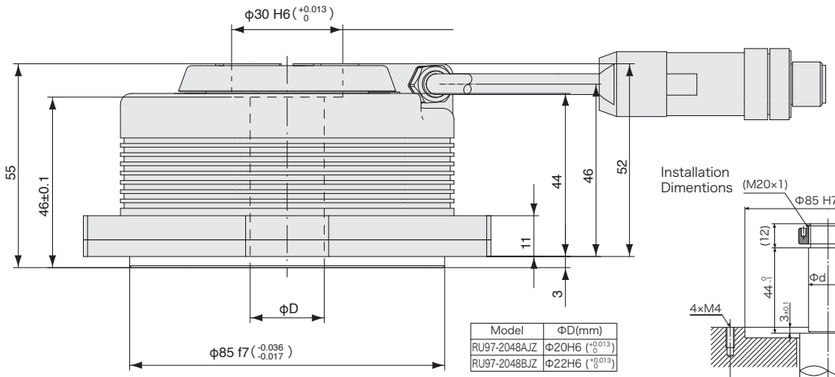

Model	ΦD(mm)
RU97-2048AJZ	Φ20H6 (+0.013 0)
RU97-2048BJZ	Φ22H6 (+0.013 0)

Installation Dimentions

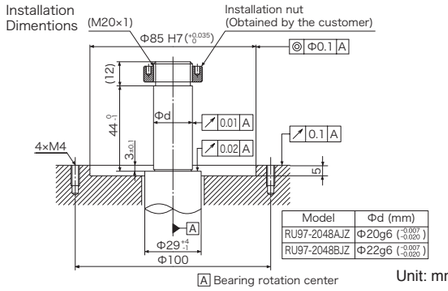

Model	Φd (mm)
RU97-2048AJZ	Φ20g6 (-0.007 -0.020)
RU97-2048BJZ	Φ22g6 (-0.007 -0.020)

Unit: mm

Specifications

Model name	RU97-2048AJZ RU97-2048BJZ
Output wave number	2,048 waves/revolution
Through hole diameter	A：φ20 mm、B：φ22 mm
Accuracy(at 20°C)	±2.5"
Output signal	Compliant with DRIVE-CLiQ, single turn absolute type
Compatible controllers	SIEMENS AG
Resolution	25 bit (33,554,432 pulses/revolution)
Maximum response revolutions	2,000 min^{-1}
Maximum mechanical revolutions	3,000 min^{-1}
Functional safety	IEC 61508, EN/BS 62061 SIL 2 EN/BS/ISO 13849-1 Cat. 3 / PL d EN/BS 61800-5-2
Product Safety	FCC Part15 Subpart B Class A ICES-003 Class A Digital Device EN/BS 61000-6-2, EN/BS 61000-6-4
Product Environment	EN/BS 63000
Operating temperature range	0 to +60°C
Storage temperature range	-10 to +60°C
Vibration resistance	150 m/s^2 (50 Hz to 2,000 Hz)
Impact resistance	1,000 m/s^2 (11 ms)
Protective design grade	IP65
Power supply voltage range	DC+17 to +30.8 V
Maximum consumption current	1.6 W or less (17 V or 30.8 V)
Consumption current	65 mA (24 V) (when the controller is connected)
Moment of inertia	9.4×10^{-5} kgm^2 or less
Starting torque (at 20°C)	0.08 Nm or less
Mass	Approx. 1.2kg or less
Compatible cables (types without relay connectors) Maximum cable length	CH22-***NSFY 30 m
Compatible cables (types with relay connectors) Maximum cable length	CH22-***NSFF + CH22-***NSFY 30 m

*Magnescale reserves the right to change product specifications without prior notice.

Details of model designation

Scale

RU97-2048☆JZ■■

[☆]Drum inner diameter

Type	Drum inner diameter
A	Φ20 mm
B	Φ22 mm

[J]Resolution 25 bit

[Z]SIEMENS AG DRIVE-CLiQ

[■■]Head cable length

Type	Head cable length
01	1 m
02	2 m
03	3 m

Cables

CH22-□□□○▽※#

[□□□]Cable length
Written by flush right, indication in "m" units, up to 30 m, 0.5 m pitch
(Example)

Type	Cable length
015	1.5m
070	7m
260	26m

[○]Conduit specification

Type	Conduit specification
C	With conduit
N	Without conduit (standard)

【▽】Cable seath (covering)

Type	Cable specification
S	PU (Polyurethane, Siemens Motion connect 800+)

【※】Scale side connector

Type	Specification	Remarks
M	Scale head connector	Standard
F	M12 connector (Female) made by Phoenix Contact	Relay/ Waterproofing
E	M12 connector (Female) made by Phoenix Contact	Relay/ Waterproofing/ Attatched connector

【#】Controller side connector

Type	Specification	Remarks
None	Open-end	
Y	RJ45 connector made by YAMAICHI ELECTRONICS	Adopts NC machine tool
Z	RJ45 connector (water proof) made by YAMAICHI ELECTRONICS	Relay
F	M12 connector (Male) made by Phoenix Contact	Relay/ Waterproofing

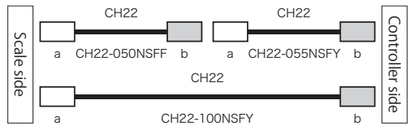

CH22-050NSFF
example)
Cable length 5m
Without conduit
PU sheath
Scale side connector
M12 (Female) made by Phoenix Contact
Controller side connector
M12 (Male) made by Phoenix Contact

CH22-100NSFY
example)
Cable length 10m
Without conduit
PU sheath
Scale side connector
M12 (Female) made by Phoenix Contact
Controller side connector
RJ45 made by YAMAICHI ELECTRONICS

CH22-055NSFY
example)
Cable length 5m
Without conduit
PU sheath
Scale side connector
M12 (Female) made by Phoenix Contact
Controller side connector
RJ45 made by YAMAICHI ELECTRONICS

Absolute angle encoder

Enclosed type

RU77-4096

- Magnetic system enables use even in environments with condensation, oil, and other adverse conditions
- Enables direct communication using the protocol of each supporting manufacturer without the requirement of an amplifier
- Internal coupling allows for design and mounting flexibility

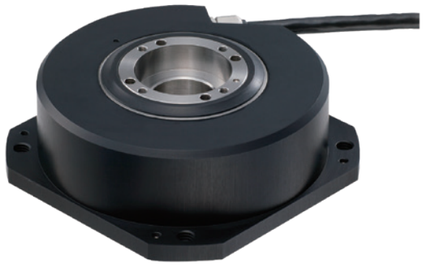

FANUC | Mitsubishi Electric | Yaskawa Electric

Dimensions

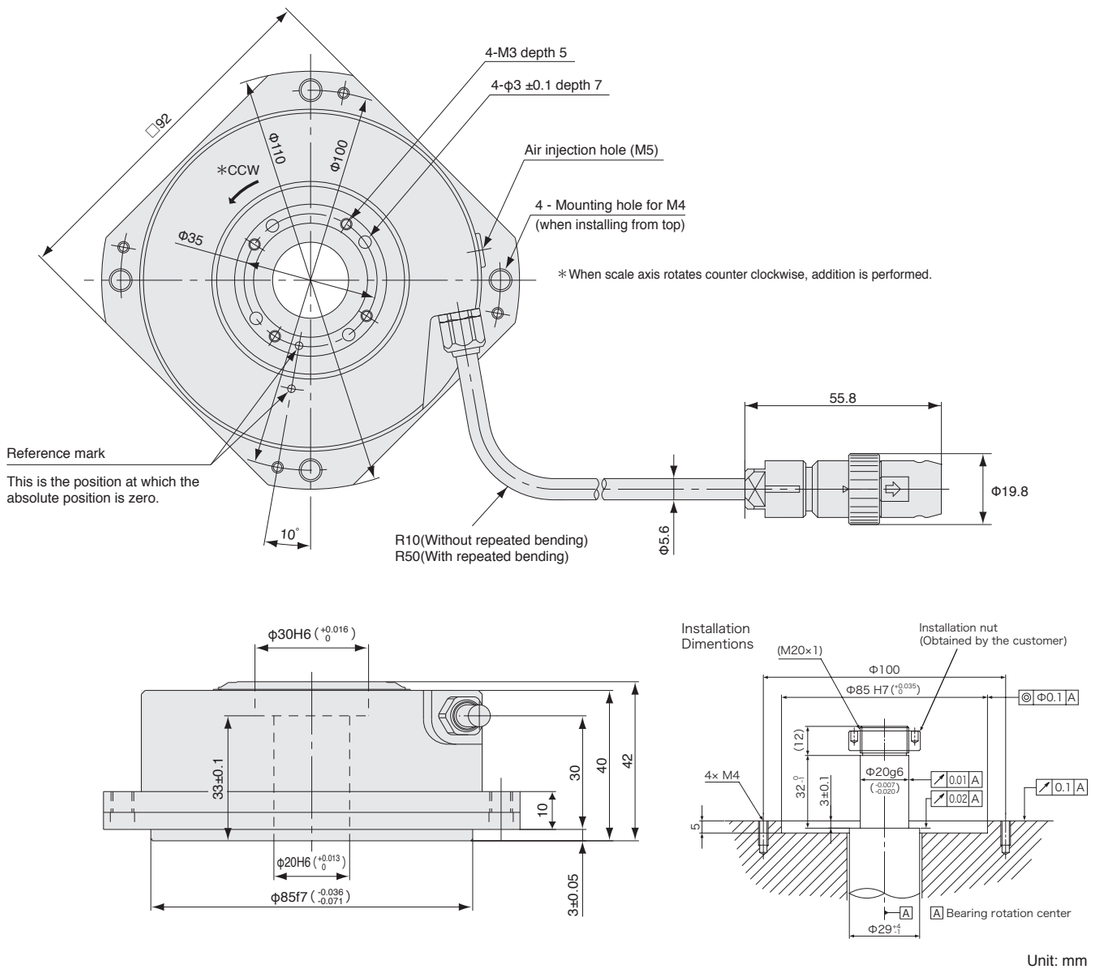

Unit: mm

Specifications

Model name	RU77-4096A□A	RU77-4096A□B RU77-4096A□D	RU77-4096A□F
Output wave number	4,096 waves/revolution		
Through hole diameter	φ20 mm		
Accuracy(at 20°C)	±2.5"		
Output signal	Absolute serial bidirectional signal, compliant with EIA-485		
Compatible controllers	FANUC	Mitsubishi Electric	Yaskawa Electric
Maximum resolution	25bit (33,554,432 pulse/revolution)		21bit (2,097,152 pulse/revolution)
Maximum response revolutions	2,000 min^{-1}		
Maximum mechanical revolutions	3,000 min^{-1}		
Product Safety	FCC Part15 Subpart B Class A ICES-003 Class A Digital Device EN/BS 61000-6-2, EN/BS 61000-6-4		
Product Environment	EN/BS 63000		
Operating temperature range	0 to +60°C		
Storage temperature range	-10 to +60°C		
Vibration resistance	150 m/s^2 (50 Hz to 2000 Hz)		
Impact resistance	1,000 m/s^2 (11 ms)		
Protective design grade	IP65		
Power supply voltage range	DC4.75-5.25 V (with connecting terminal)		
Consumption current	200mA (at 120Ω termination)		
Moment of inertia	9.4×10^{-5} kgm^2 or less		
Starting torque (at 20°C)	0.1 Nm or less		
Mass	Approx. 1.2kg or less		
Standard compatible cable	CH33A-***,CE28A-***	CH33-***,CE28-***	
Maximum cable length	CH33A-*** : 30 m, CE28A-*** : 15 m	CH33-*** : 30 m, CE28A-*** : 15 m	

*Magnescale reserves the right to change product specifications without prior notice.

Details of model designation

Scale

RU77-4096A□△★○○

[□]Resolution

Type	Resolution	Number of pulses/revolution	Number of partitions
A	Approx. 2.5°/1,000	131,072	1/32
B	Approx. 1°/1,000	262,144	1/64
C	Approx. 7°/10,000	524,288	1/128
D	Approx. 3.5°/10,000	1,048,576	1/256
E	Approx. 2°/10,000	2,097,152	1/512
F	Approx. 1°/10,000	4,194,304	1/1,024
G	Approx. 4.5°/100,000	8,388,608	1/2,048
H	Approx. 2°/100,000	16,777,216	1/4,096
J	Approx. 1°/100,000	33,554,432	1/8,192

*Yaskawa Electric: D,F

[△]Communication protocol

Type	Number of wires	NC manufacturer
A	4-wire	FANUC α interface
B	2-wire	Mitsubishi Electric
D	4-wire	Mitsubishi Electric
F	2-wire	Yaskawa Electric

[○○]Cable length

Type	Cable length
10	1m

[★]Connector

Connector	Description	Remarks
Metal water proofing	G	main cable length Max.9m、extension cable : CE28/CE28A ※Max cable length(main+extension) : 15m
Plastic water proofing	J	main cable length Max.1m、extension cable : CH33/CH33A ※Max cable length(main+extension) : 30m

Cable

CH33-□□○▽※#

CH33A-□□○▽※#

(CH33A : FANUC model only)

[□□]Cable length
Written by flush right,
indication in "m" units,
up to 30 m, 1 m pitch

(Example)

Type	Cable length
07	7m
26	26m

[○]Conduit

Type	Conduit
C	With conduit
N	Without conduit

【▽】Cable seath (covering)

Type	
P	PVC (Polyvinyl chloride)
E	PU (Polyurethane)

【※】Controller side connector

Type		Specification	Remarks
Without	With	Earth wire	
None	-	Open-end	Standard
M	-	10P made by Sumitomo 3M	Mitsubishi NC, J3, J4 (ABS)
F	-	20P straight case made by Honda Tsushin Kogyo	FANUC (ABS)
G	-	6P made by molex®	YASKAWA Electric (ABS)
J	-	Horizontal drawing case made by HIROSE Electric	FANUC (ABS)
K	-	10P JN1 (Male) made by Japan Aviation Electronics Industry	Relay

【#】Scale side connector

Type	Specification	Remarks
A	10P JN2 (Female) made by Japan Aviation Electronics Industry	Relay

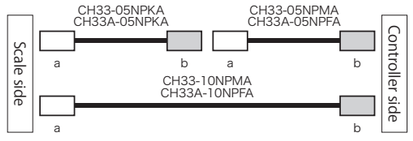

CH33-05NPKA
CH33A-05NPKA

example)
Cable length 5m
Without conduit
Controller side connector
10P (JN1) made by Japan Aviation Electronic Industry
Scale side connector
JN2DS10SL2-R made by Japan Aviation Electronics Industry

CH33-10NPMA
CH33A-10NPFA

example)
Cable length 10m
Without conduit
Controller side connector
<CH33> 10P made by Sumitomo 3M
<CH33A> 20P made by Honda Tsushin Kogyo
Scale side connector
JN2DS10SL2-R made by Japan Aviation Electronics Industry

CH33-05NPMA
CH33A-05NPFA

example)
Cable length 5m
Without conduit
Controller side connector
<CH33> 10P made by Sumitomo 3M
<CH33A> 20P made by Honda Tsushin Kogyo
Scale side connector
JN2DS10SL2-R made by Japan Aviation Electronics Industry

CE28-□□□○※

CE28A-□□□○※

(CE28A : FANUC model only)

[□□□]Cable length
Written by flush right,
indication in "10cm" units,
up to 14m,1m pitch

Type	Cable length
070	7m
090	9m
130	13m

[○]Conduit

Type	Conduit
C	With conduit
N	Without conduit

【※】Controller side connector

Type		Specification	Remarks
Without	With	Earth wire	
Without	-	Open-end	Standard
M	-	10P made by Sumitomo 3M	Mitsubishi NC, J3, J4 (ABS)
F	-	20P made by Honda Tsushin Kogyo	FANUC (ABS)
G	-	6P made by molex®	YASKAWA Electric (ABS)
J	-	10P (JB1) made by Japan Aviation Electronics Industry	RU77 cable extention (standard)
K	-	10P (JN1) made by Japan Aviation Electronics Industry	RU77 cable extention (standard)

Other Models

Absolute linear encoder slim type

SR77

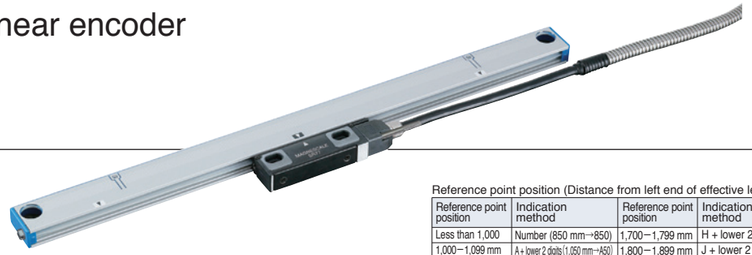

FANUC
Mitsubishi Electric
Panasonic
Yaskawa Electric

- Effective length: 70,120,170,220,270,320,370,420,470,520, 570,620,720,770,820,920,1020,1140,1240, 1340,1440,1540,1640,1740,1840,2040 mm
- Maximum resolution: 0.01μm
- Accuracy: (3+3L/1,000) μmp-p L:mm
  (5+5L/1,000) μmp-p L:mm
- Maximum response speed: 200m/min
- Protective design grade: IP65

Cable:
CH33 (Mitsubishi Electric, Panasonic, Yaskawa Electric)
CH33A (FANUC)

※ Please refer to page 29 for cable specifications.

SR77- ×××★○△◆□□□

Effective length (L): cm units

Reference point position (Distance from left end of effective length)

Reference point position	Indication method	Reference point position	Indication method	Reference point position	Indication method
Less than 1,000	Number (850 mm→850)	1,700−1,799 mm	H + lower 2 digits	Center	X
1,000−1,099 mm	A + lower 2 digits (1,050 mm→A50)	1,800−1,899 mm	J + lower 2 digits		
1,100−1,199 mm	B + lower 2 digits	1,900−1,999 mm	K + lower 2 digits		
1,200−1,299 mm	C + lower 2 digits	2,000−2,040 mm	L + lower 2 digits		
1,300−1,399 mm	D + lower 2 digits				
1,400−1,499 mm	E + lower 2 digits				
1,500−1,599 mm	F + lower 2 digits				
1,600−1,699 mm	G + lower 2 digits				

Communication protocol

Type	NC manufacturer	Number of wires
A	FANUC α interface	4-wire
B	Mitsubishi Electric	2-wire
D	Mitsubishi Electric	4-wire
H	Panasonic	2-wire
F	Yaskawa Electric	2-wire

Resolution and direction

FANUC, Mitsubishi Electric, Panasonic

Type	Direction	Resolution	Type	Direction	Resolution
A	(plus)	0.01	F	(minus)	0.01
B		0.05	G		0.05
C		0.1	H		0.1
D		0.5	J		0.5
E		1	K		1

Yaskawa Electric

Type	Direction	Number of partitions
L	(plus)	1/8,192
M		1/1,024

Mitsubishi Electric is only A, B, C
Panasonic can be used with A~E*
*Contact our sales directly for detail model name

Accuracy grade

Type	Accuracy grade
A	(5+5L/1,000) μm
S	(3+3L/1,000) μm

L: Effective length(mm)

Cable lead-out direction

Type	Lead-out direction
R	Right
L	Left

Incremental linear encoder slim type

SR75

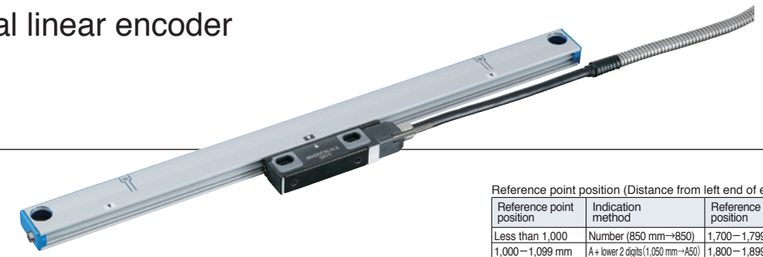

Mitsubishi Electric
Panasonic
Yaskawa Electric

- Effective length: 70,120,170,220,270,320,370,420,470,520, 570,620,720,770,820,920,1020,1140,1240, 1340,1440,1540,1640,1740,1840,2040 mm
- Maximum resolution: 0.01μm
- Accuracy: (3+3L/1,000) μmp-p L:mm
  (5+5L/1,000) μmp-p L:mm
- Maximum response speed: 200m/min
- Protective design grade: IP65

Cable: CH33

※ Please refer to page 29 for cable specifications.

SR75- ×××★○△◆□□□

Effective length (L): cm units

Reference point position (Distance from left end of effective length)

Reference point position	Indication method	Reference point position	Indication method
Less than 1,000	Number (850 mm→850)	1,700−1,799 mm	H + lower 2 digits
1,000−1,099 mm	A + lower 2 digits (1,050 mm→A50)	1,800−1,899 mm	J + lower 2 digits
1,100−1,199 mm	B + lower 2 digits	1,900−1,999 mm	K + lower 2 digits
1,200−1,299 mm	C + lower 2 digits	2,000−2,040 mm	L + lower 2 digits
1,300−1,399 mm	D + lower 2 digits	Center	X
1,400−1,499 mm	E + lower 2 digits		
1,500−1,599 mm	F + lower 2 digits		
1,600−1,699 mm	G + lower 2 digits		

Communication protocol

Type	NC manufacturer	Number of wires
B	Mitsubishi Electric	2-wire
D	Mitsubishi Electric	4-wire
H	Panasonic	2-wire
F	Yaskawa Electric	2-wire

Resolution and direction

Mitsubishi Electric, Panasonic

Type	Direction	Resolution
A	(plus)	0.01
B		0.05
C		0.1
D		0.5
E		1

Yaskawa Electric

Type	Direction	Number of partitions
L	(plus)	1/8,192
M		1/1,024

Mitsubishi Electric is only A, B, C
Panasonic can be used with A~E*
*Contact our sales directly for detail model name

Accuracy grade

Type	Accuracy grade
A	5+5L/1,000 μm
S	3+3L/1,000 μm

L: Effective length(mm)

Cable lead-out direction

Type	Lead-out direction
R	Right
L	Left

Absolute linear encoder robust type

SR87

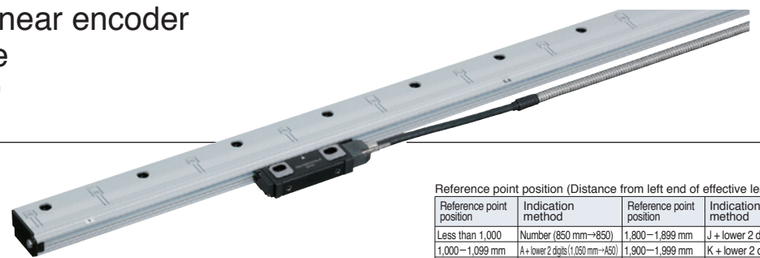

FANUC
Mitsubishi Electric
Panasonic
Yaskawa Electric

- Effective length: 140,240,340,440,540,640,740,840,940,1040, 1140,1240,1340,1440,1540,1640,1740,1840, 2040,2240,2440,2640,2840,3040 mm
- Maximum resolution: 0.01μm
- Accuracy: (3+3L/1,000) μmp-p L:mm
  (5+5L/1,000) μmp-p L:mm
- Maximum response speed: 200m/min
- Protective design grade: IP65

Cable:
CH33 (Mitsubishi Electric, Panasonic, Yaskawa Electric)
CH33A (FANUC)

※ Please refer to page 29 for cable specifications.

SR87- ×××★○△◆□□□

Effective length (L): cm units

Reference point position (Distance from left end of effective length)

Reference point position	Indication method	Reference point position	Indication method	Reference point position	Indication method
Less than 1,000	Number (850 mm→850)	1,800−1,899 mm	J + lower 2 digits	2,700−2,799 mm	T + lower 2 digits
1,000−1,099 mm	A + lower 2 digits (1,050 mm→A50)	1,900−1,999 mm	K + lower 2 digits	2,800−2,899 mm	U + lower 2 digits
1,100−1,199 mm	B + lower 2 digits	2,000−2,040 mm	L + lower 2 digits	2,900−2,999 mm	V + lower 2 digits
1,200−1,299 mm	C + lower 2 digits	2,100−2,199 mm	M + lower 2 digits	3,000−3,040 mm	W + lower 2 digits
1,300−1,399 mm	D + lower 2 digits	2,200−2,299 mm	N + lower 2 digits	Center	X
1,400−1,499 mm	E + lower 2 digits	2,300−2,399 mm	P + lower 2 digits		
1,500−1,599 mm	F + lower 2 digits	2,400−2,499 mm	Q + lower 2 digits		
1,600−1,699 mm	G + lower 2 digits	2,500−2,599 mm	R + lower 2 digits		
1,700−1,799 mm	H + lower 2 digits	2,600−2,699 mm	S + lower 2 digits		

Communication protocol

Type	NC manufacturer	Number of wires
A	FANUC α interface	4-wire
B	Mitsubishi Electric	2-wire
D	Mitsubishi Electric	4-wire
H	Panasonic	2-wire
F	Yaskawa Electric	2-wire

Resolution and direction

FANUC, Mitsubishi Electric, Panasonic

Type	Direction	Resolution	Type	Direction	Resolution
A	(plus)	0.01	F	(minus)	0.01
B		0.05	G		0.05
C		0.1	H		0.1
D		0.5	J		0.5
E		1	K		1

Yaskawa Electric

Type	Direction	Number of partitions
L	(plus)	1/8,192
M		1/1,024

Mitsubishi Electric is only A, B, C
Panasonic can be used with A~E*
*Contact our sales directly for detail model name

Accuracy grade

Type	Accuracy grade
A	(5+5L/1,000) μm
S	(3+3L/1,000) μm

L: Effective length(mm)

Cable lead-out direction

Type	Lead-out direction
R	Right
L	Left

Incremental angle encoder enclosed type

RU74

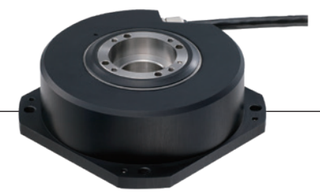

A/B/Reference point

- Hollow diameter: φ20
- Resolution: Approx.1/1,000° , Approx.1/10,000°
- Accuracy: ±2.5"
- Maximum response revolution: As the table on the right
- Protective design grade: IP65

RU74-4096A□■

Minimum phase difference

Type	Minimum phase difference	Response revolutions (min.) Approx.1°/1,000	Response revolutions (min.) Approx.1°/10,000	Type	Minimum phase difference	Response revolutions (min.) Approx.1°/1,000
A	50	2,000	267	E	250	533
B	100	1,332	133	F	300	444
C	150	888	89	G	400	333
D	200	666	67	H	500	266
				J	650	205
				K	1,000	133

Resolution, rotation direction and polarity

Type	Resolution	Rotation direction and polarity	Number of pulses/revolution
A	Approx. 1 °/1,000	CW/ +	360,448
B	Approx.1°/1,000	CCW/ +	360,448
C	Approx.1°/10,000	CW/ +	3,600,384
D	Approx.1°/10,000	CCW/ +	3,600,384

Cable

CE28-＊＊＊○#

Controller side connector

Conduit

Type	Conduit
C	With conduit
N	Without conduit

Cable length
Written by flush right, indication in "10 cm" units, up to 14 m, 1 m pitch
Note: 15 m or less including RU74 main unit head cable length

List of Adapter Cables

Scale	Connected equipment	Controller side Connector	List of Adapter Cables	Scale side Connector	Maximum cable length	Cable bending radius
SR27A SR67A	General-purpose cable	Open end	CH23-***○□	Scale side Original of Magnescale	13 m	20 mm(Fixed, without conduit) 25 mm(Fixed, with conduit) 50 mm(Elbow-shaped bend)
	FANUC	Controller side Honda Tsushin Kogyo PCR-S20FS+	CH23A-***○□F	Scale side Original of Magnescale	13 m	20 mm(Fixed, without conduit) 25 mm(Fixed, with conduit) 50 mm(Elbow-shaped bend)
			CH23A-***○□FA / CH23A-***○□K		Combined total 30 m	
		Relay connector JAE JN1HS10PL2	CH23A-***○□KA	Relay connector JAE JN2DS10SL-R	Combined total 30 m	
	Mitsubishi Electric	Controller side Sumitomo 3M 36210-0100PL	CH23-***○□M	Scale side Original of Magnescale	13 m	
			CH23-***○□MA / CH23-***○□K		Combined total 30 m	
		Relay connector JAE JN1HS10PL2	CH23-***○□KA	Relay connector JAE JN2DS10SL-R	Combined total 30 m	
	SIEMENS	Controller side YAMAICHI ELECTRONICS CN078P-061-0001	CH22-***○SMY	Scale side Original of Magnescale	30 m	35 mm(Fixed) 75 mm(Elbow-shaped bend)
			CH22-***○SFY / CH22-***○SMF		Combined total 30 m	
		Relay connector Phoenix Contact SACC-M12MS-8Q SH	CH22-***○SFF	Relay connector Phoenix Contact SACC-M12MS-8Q SH	Combined total 30 m	
SR74 SR84	General-purpose cable	Open end	CH33-**○▽	Scale side Original of Magnescale	30 m	20 mm(Fixed, without conduit) 25 mm(Fixed, with conduit) 50 mm(Elbow-shaped bend)
	FANUC	Controller side Honda Tsushin Kogyo PCR-S20FS+	CH33-**○▽E/P	Scale side Original of Magnescale	30 m	20 mm(Fixed, without conduit) 25 mm(Fixed, with conduit) 50 mm(Elbow-shaped bend) Relay type cannot be used for A/B Phase of SR74/84.
	Mitsubishi Electric	Controller side Sumitomo 3M 36210-0100PL	CH33-**○▽L	Scale side Original of Magnescale	30 m	

Scale	Connected equipment	Controller side Connector	List of Adapter Cables	Scale side Connector	Maximum cable length	Cable bending radius
RU97	SIEMENS	Controller side YAMAICHI ELECTRONICS CN078P-061-0001	CH22-***○SFY	Relay connector Phoenix Contact SACC-M12MS-8Q SH	30 m	35 mm(Fixed) 75 mm(Elbow-shaped bend)
		Relay connector Phoenix Contact SACC-M12MS-8Q SH	CH22-***○SFF	Relay connector Phoenix Contact SACC-M12MS-8Q SH	Combined total 30 m	
RU77	FANUC	Controller side Honda Tsushin Kogyo PCR-S20FS+	CE28A-***○F	Scale side JAE JB1HB10SL2	14 m	10 mm(Fixed, without conduit) 25 mm(Fixed, with conduit) 50 mm(Elbow-shaped bend)
		Relay connector JAE JB1D10PL2	CE28A-***○J	Relay connector JAE JB1HB10SL2		
	Mitsubishi Electric	Controller side Sumitomo 3M 36210-0100PL	CE28-***○M	Scale side JAE JB1HB10SL2		
		Relay connector JAE JB1D10PL2	CE28-***○J	Relay connector JAE JB1HB10SL2		
	Yaskawa Electric	Controller side Molex 6P 55100-0670	CE28-***○G	Scale side JAE JB1HB10SL2		
		Relay connector JAE JB1D10PL2	CE28-***○J	Relay connector JAE JB1HB10SL2		
RS97	FANUC	Controller side Honda Tsushin Kogyo PCR-S20FS+	CH23A-***○□FA	Scale side JAE JN2DS10SL-R	30 m	20 mm(Fixed, without conduit) 25 mm(Fixed, with conduit) 50 mm(Elbow-shaped bend)
		Relay connector JAE JN1HS10PL2	CH23A-***○□KA	Relay connector JAE JN2DS10SL-R	Combined total 30 m	
	Mitsubishi Electric	Controller side Sumitomo 3M 36210-0100PL	CH23-***○□MA	Scale side JAE JN2DS10SL-R	30 m	
		Relay connector JAE JN1HS10PL2	CH23-***○□KA	Relay connector JAE JN2DS10SL-R	Combined total 30 m	
	SIEMENS	Controller side YAMAICHI ELECTRONICS CN078P-061-0001	CH22-***○SFY	Scale side Phoenix Contact SACC-M12FS-8Q SH	30 m	35 mm(Fixed) 75 mm(Elbow-shaped bend)
		Relay connector Phoenix Contact SACC-M12MS-8Q SH	CH22-***○SFF	Relay connector Phoenix Contact SACC-M12MS-8Q SH	Combined total 30 m	

Cables

CH22-□□□○▽※#

[□□□]Cable length
Written by flush right, indication in "m" units, up to 30 m, 0.5 m pitch

(Example)

Type	Cable length
015	1.5m
070	7m
260	26m

[○]Conduit specification

Type	Conduit specification
C	With conduit
N	Without conduit (standard)

[▽]Cable seath (covering)

Type	Cable specification
S	PU (Polyurethane, Siemens Motion connect 800+)

[※]Scale side connector

Type	Specification	Remarks
M	Scale head connector	Standard
F	M12 connector (Female) made by Phoenix Contact	Relay/ Waterproofing
E	M12 connector (Female) made by Phoenix Contact	Relay/ Waterproofing/ Attatched connector

[#]Controller side connector

Type	Specification	Remarks
None	Open-end	
Y	RJ45 connector made by YAMAICHI ELECTRONICS	Adopts NC machine tool
Z	RJ45 connector (water proof) made by YAMAICHI ELECTRONICS	Relay
F	M12 connector (Male) made by Phoenix Contact	Relay/ Waterproofing

CH23-□□□○▽※#
CH23A-□□□○▽※#

(CH23A ：FANUC model only)

[□□□]Cable length

(Example)

Type	Cable length
010	1m
005	0.5m
065	6.5m
100	10m

[○]Conduit specification

Type	Conduit specification
C	With conduit (standard)
N	Without conduit

[▽]Cable sheath (covering)

Type	Cable specification
V	PVC(Φ6.8) [Scale side]
C	PU(Φ6.8) [Scale side]
P	PVC(Φ8) [Controller side]
E	PU(Φ8) [Controller side]

[※]Controller side connector

Type		Specification	Remarks
Without	With	Earth wire	
Z	-	Open-end	Scale side connector should be 10P JN2 (Female) made by Japan Aviation Electronics Industry or 2P made by TAJIMI ELECTRONICS
None	-		Standard
M	-	10P made by Sumitomo 3M	Mitsubishi NC, J3 (ABS)
F	-	20P straight case made by Honda Tsushin Kogyo	FANUC (ABS)
J	-	Horizontal drawing case made by HIROSE Electric	FANUC (ABS)
K	-	10P JN1 (Male) made by Japan Aviation Electronics Industry	Relay
N	-	12P R04 (Male) made by TAJIMI ELECTRONICS	Relay (fixed)

[#]Scale side connector

Type	Specification	Remarks
None	Original of Magnescale	Standard
A	10P JN2 (Female) made by Japan Aviation Electronics Industry	Relay
C	12P R04-9125JF8.5 made by TAJIMI ELECTRONICS	Relay (fixed)

CE28-□□□○※
CE28A-□□○○※

(CE28A : FANUC model only)

[□□□]Cable length
Written by flush right, indication in "10 cm" units, up to 14m, 1m pitch

(Example)

Type	Cable length
070	7m
090	9m
130	13m

[○]Conduit

Type	Conduit
C	With conduit
N	Without conduit

[※]Controller side connector

Type		Specification	Remarks
Without	With	Earth wire	
Without	-	Open-end	Standard
L	-	10P made by Sumitomo 3M	Mitsubishi NC, J3 (A/B Phase)
M	-		Mitsubishi NC, J3 (INC serial, ABS)
E	P	20P made by Honda Tsushin Kogyo	FANUC (A/B Phase)
F	-		FANUC (INC serial, ABS)
G	-	6P made by molex®	YASKAWA Electric (INC serial, ABS)
J	-	10P (JB1) made by Japan Aviation Electronics Industry	RU77 cable extention (standard)
K	-	10P (JN1) made by Japan Aviation Electronics Industry	RU77 cable extention (standard)

CH33-□□○▽※#

[□□]Cable length
Written by flush right, indication in "m" units, up to 30 m, 1 m pitch

(Example)

Type	Cable length
07	7m
26	26m

[○]Conduit

Type	Conduit
C	With conduit (standard)
N	Without conduit

[▽]Cable seath (covering)

Type	
P	PVC (Polyvinyl chloride)
E	PU (Polyurethane)

[※]Controller side connector

Type		Specification	Remarks
Without	With	Earth wire	
None	-	Open-end	Standard
A	-	D-sub 15P	
D	-	D-sub 9P	
L	-	10P made by Sumitomo 3M	Mitsubishi NC, J3,J4 (A/B Phase)
M	-		Mitsubishi NC, J3,J4 (INC serial, ABS)
-	P	20P straight case made by Honda Tsushin Kogyo	FANUC (A/B Phase)
-	Q		FANUC (INC serial, ABS)
G	-	6P made by molex®	YASKAWA Electric, Panasonic (INC serial, ABS)
-	R	Horizontal drawing case made by HIROSE Electric	FANUC (A/B Phase)
-	S		FANUC (INC serial, ABS)
K	-	10P JN1 (Male) made by Japan Aviation Electronics Industry	Relay
N	-	12P R04 (Male) made by TAJIMI ELECTRONICS	Relay(fixed)

[#]Scale side connector

Type	Specification	Remarks
None	Original of Magnescale	Standard
A	10P JN2(Female)made by Japan Aviation Electronics Industry	Relay
C	12P R04-9125JF8.5 made by TAJIMI ELECTRONICS	Relay(fixed)

*Relay type cannot be used for A/B/Reference type of SR74 and SR84

Technology

Air purging

If scale is used in a dusty or misty environment, it is recommended that air is introduced into the scale to alleviate any unwanted effects. Attach air nipples to M5 holes for air introduction that are provided at both ends of the scale to supply air into the scale. When introducing air into the scale, supply air via an air filter (nominal filtration rating: 5 µm), mist separator (nominal filtration rating: 0.3 µm), and a regulator to remove dust, dirt, and mist. As a guide, the amount of air supplied to the scale is 10-20ℓ/min.

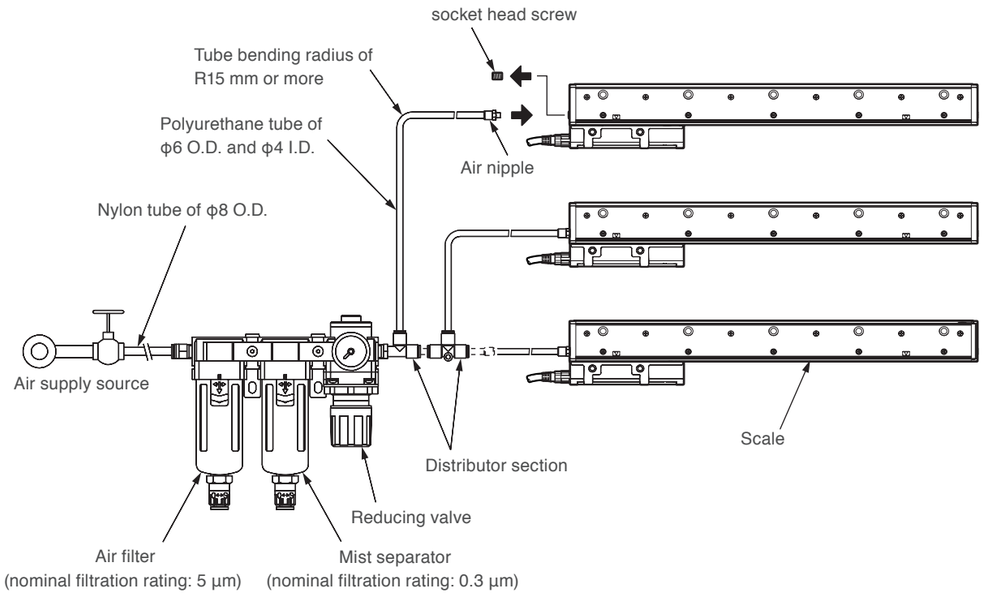

Traceability

Traceability Flow Chart (Length)

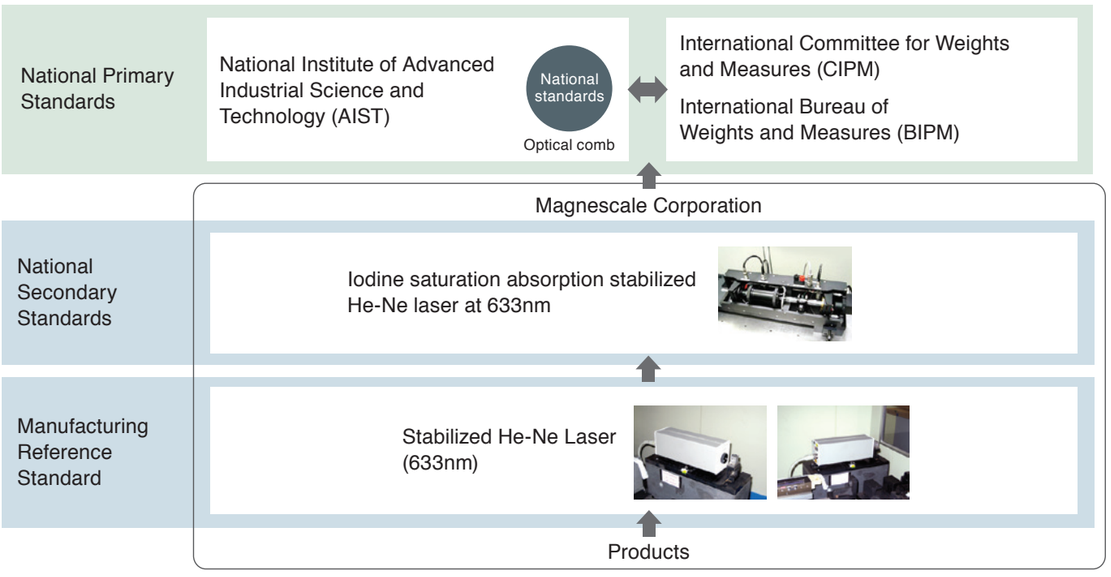

Quality

No compromise for high-accuracy products

The total quality control system that operates throughout the entire design and production process ensures products with enhanced safety, high quality, and high reliability that match our customers' requirements. The company is certified for length calibration in compliance with the traceability system required by the "Weights and Measures Act," and has been granted ISO 9001 certification, which is the international standard for quality assurance. In addition, we have introduced the highest level EMC (Electromagnetic Compatibility) testing equipment to address the noise problem that is becoming increasingly regulated around the world, and we are taking all possible measures to control quality.

Our products comply with CE/UKCA Marking requirements, have acquired UL certifications and meet other regulations, ensuring safe use the world over.

We have met:

- CE/UKCA Marking (EMC Directives) EMI : EN/BS 61000-6-4, EMS : EN/BS 61000-6-2
- CE/UKCA Marking (RoHS Directives) EN/BS 63000
- FCC regulation FCC Part 15 Subpart B Class A
- ICES regulation ICES-003 Class A

for Products with built-in AC power supply:
- UL/cUL 61010-1 • EN/BS 61010-1

for Products with Laser:
- DHHS (21CFR1040.10) • EN/BS 60825-1 • JIS C 6802

* When using our devices with machines to which the European Machinery Drirective (EN60204-1) applies, please make sure that the devices when installed on the machines fulfil the applicable requirements of the Directive.
* Standards or regulations to be complied with may vary by product.

Functional Safety

Recently, great importance has been placed on human safety around industrial machines and machine tools. In 2010, the European Machinery Directive mandated compliance with functional safety for electrical equipment used in the safety systems of machines subject to the Machinery Directory. These safety demands are anticipated to spread across many additional regions and industries in the future. Magnescale leads the competition with its lineup of feedback scale that have acquired third-party functional safety certification in order to meet global demands for safety.

Certification standards	IEC 61508, EN/BS 62061 SIL 2 EN/BS/ISO 13849-1 Cat. 3 / PL d EN/BS 61800-5-2
Models that have acquired certification	• Angle encoders RS97-1024EGZ series RS97-1024NGZ series RU97-2048 Z series • Linear encoders SR27A-AZ series SR67A-AZ series

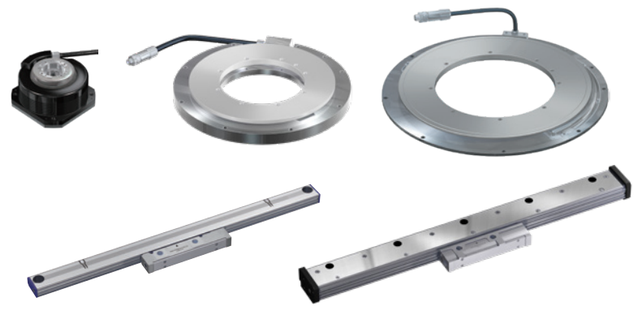

* Consult our sales representative for details.